ENERGY CALCULATIONS

THESE VALUES WERE USED TO CREATE THE RESCHECK COMPLIANCE CERTIFICATE

NOTE:
AIR FILM VALUES SOURCED FROM THE 2021 ASHRAE FUNDAMENTALS, CHAPTER 26, PAGE 26.21, TABLE 10

WALL ASSEMBLY
OUTSIDE AIR FILM: 0.25
5.75" EPS WALL PANEL: 22.54 (ASSUMES R VALUE OF 3.92/INCH) VARIES ANYWHERE FROM 3.5 TO 4.0
1/4" MGO BOARD: 0
INSIDE AIR FILM: 0.68

- **TOTAL FOR WALL ASSEMBLY: R= 23.47 U= 0.0426**

FLOOR ASSEMBLY
OUTSIDE AIR FILM: 0.25
6.75" EPS WALL PANEL: 26.46 (ASSUMES R VALUE OF 3.92/INCH) VARIES ANYWHERE FROM 3.5 TO 4.0
1/4" MGO BOARD: 0
INSIDE AIR FILM: 0.92

- **TOTAL FOR FLOOR ASSEMBLY: R= 27.63 U= 0.0362**

ROOF ASSEMBLY
OUTSIDE AIR FILM: 0.25
6.75" EPS WALL PANEL: 26.46 (ASSUMES R VALUE OF 3.92/INCH) VARIES ANYWHERE FROM 3.5 TO 4.0
1/4" MGO BOARD: 0
INSIDE AIR FILM: 0.61

- **TOTAL FOR ROOF ASSEMBLY: R= 27.32 U= 0.0366**

ROOF ASSEMBLY (CLIMATE ZONES 5 OR HIGHER)
BLOWN IN CELLULOSE INSULATION: R = 14.4
6.75" EPS WALL PANEL: 26.46 (ASSUMES R VALUE OF 3.92/INCH) VARIES ANYWHERE FROM 3.5 TO 4.0
1/4" MGO BOARD: 0
INSIDE AIR FILM: 0.61

- **TOTAL FOR ROOF ASSEMBLY: R= 41.47 U= 0.0241**

- CLIMATE ZONE 5 OR HIGHER: ADD 4" BLOWN IN CELLULOSE INSULATION (R = 14.4) OR OTHER INSULATION OF EQUAL R VALUE
- ENVELOPE CALCULATIONS WERE DONE USING THE PERFORMANCE METHOD
- BASED ON OUR RESCHECK ANALYSIS, THE LOSS OF THERMAL EFFICIENCY DUE TO INTERNAL CHASES, AND OTHER VOIDS WERE NEGLIGIBLE, AND DID NOT HAVE A NEGATIVE EFFECT ON THE OVERALL THERMAL PERFORMANCE OF THE UNIT.
- R VALUES NOTED ABOVE (R 3.92/IN) ARE REFERENCED IN ICC EVALUATION REPORT ESR 1962, FOR EXPANDED POLYSTYRENE INSULATION. THIS INSULATION IS LISTED AS THE INSULATION USED IN THE ICC ES EVALUATION REPORT ESR 4725 FOR STRUCTURAL INSULATION PANELS.

BOXABL

STUDIO CASITA
TWO DOOR - MODEL BXB-000009

BUILDING INFORMATION

ADDRESS:
ADDRESS:
CITY:
COUNTY:
STATE:

BUILDING CODE:

- BUILDING CODE:
- MECHANICAL CODE:
- ELECTRICAL CODE:
- PLUMBING CODE:
- ENERGY CODE:

- UNLIMITED OPENINGS IN EXTERIOR WALLS REQUIRE A MINIMUM SEPARATION OF 5'-0" BETWEEN UNITS

BUILDING DATA

OCCUPANCY CLASSIFICATION:	IRC ACCESSORY STRUCTURE OR DWELLING UNIT
TOTAL BUILDING AREA:	361 SQ FT
BUILDING HEIGHT:	10'-9"
CONSTRUCTION TYPE:	V-B (STRUCTURAL INSULATING PANELS)
CLIMATE ZONE:	1-6 (SOME CLIMATE REGIONS MAY REQUIRE ADD. INSULATION)

TESTS PASSED:

- NFPA 286 CORNER BURN TEST
- ASTM E84 NON-COMBUSTIBLE MATERIAL CONSTRUCTION
- ICC EVALUATION REPORT ESR 4725

GENERAL NOTES

THE ARCHITECT AND HIS CONSULTANTS DO NOT WARRANTY OR GUARANTEE THE COMPLETENESS OF THE WORK BEYOND A REASONABLE DILIGENCE. IF ANY ERRORS, DISCREPANCIES, OR OMISSIONS ARE FOUND TO EXIST IN THE WORK PRODUCT, THE ARCHITECT SHALL BE PROMPTLY NOTIFIED SO THAT HE MAY HAVE THE OPPORTUNITY TO TAKE WHATEVER STEPS NECESSARY TO RESOLVE THE ISSUE. FAILURE TO PROMPTLY NOTIFY THE ARCHITECT OF SUCH CONDITIONS, SHALL ABSOLVE THE ARCHITECT FROM ANY RESPONSIBILITY OF SUCH FAILURE. ACTION TAKEN WITHOUT THE KNOWLEDGE AND CONSENT OF THE ARCHITECT, IN CONTRADICTION TO THE WORK PRODUCT, OR THE RECOMMENDATIONS OF THE ARCHITECT SHALL BECOME THE RESPONSIBILITY OF THE PARTIES RESPONSIBLE FOR TAKING SUCH ACTION.

THESE DRAWINGS WERE PREPARED BASED ON THE ASSUMPTION THAT ANY CONTRACTOR, SUBCONTRACTOR, SUPPLIER, OR VENDOR INVOLVED IN THE CONSTRUCTION OF THE WORK DESCRIBED HEREIN HAS EXPERIENCE IN THEIR RESPECTIVE AREAS OR DISCIPLINES THAT MAKE UP THE SCOPE OF THE PROJECT.

MANUFACTURERS COMPLIANCE CERTIFICATE CAN BE FOUND INSIDE THE ELECTRICAL SUB PANEL DOOR.

THESE UNITS ARE PREFABRICATED FACTORY BUILT ACCESSORY DWELLING UNITS. PLUMBING, ELECTRICAL, & HVAC ARE PRE-INSTALLED, AND ARE CONNECTED TO INCOMING UTILITIES WHEN THE UNIT IS SET ON SITE.

FOUNDATION SYSTEM IS PERMITTED & INSTALLED SEPARATELY BY THE UNIT OWNER.

THIS SET IS INTENDED TO BE USED IN CONJUNCTION WITH THE MANUFACTURERS PANEL DRAWINGS AND STRUCTURAL DRAWINGS.

DATE:	REV:	DESCRIPTION:

BOXABL INC.

5345 EAST NORTH BELT ROAD
NORTH LAS VEGAS, NV 89115, USA

+1(702) 500-9000 HELLO@BOXABL.COM

MODEL: 2 DOOR CASITA BXB-000009

SHEET: G1.0 COVER SHEET

BOXABL

DRAWING INDEX

Sheet Number	Sheet Title	REVISIONS 1	2	3	4	5	6
GENERAL							
G1.0	COVER SHEET						
G1.1	DRAWING INDEX						
G1.2	SCOPE OF WORK AND STRUCTURAL DESIGN CRITERIA						
G1.3	PRE-CONSTRUCTION DISCLOSURE						
G2.0	ENERGY CALCS						
G2.1	ENERGY CALCS						
ARCHITECTURAL							
A1.0	FLOOR PLAN						
A2.0	EXTERIOR ELEVATIONS - FOAM WEDGE ROOF						
A2.1	EXTERIOR ELEVATIONS - GABLE ROOF 3:12 SLOPE						
A2.2	EXTERIOR ELEVATIONS - GABLE ROOF 6:12 SLOPE						
A2.3	EXTERIOR ELEVATIONS - GABLE ROOF 9:12 SLOPE						
A2.4	EXTERIOR ELEVATIONS - SHED (MONOSLOPE) ROOF						
A2.5	EXTERIOR ELEVATIONS - QUAD HIP ROOF						
A2.6	EXTERIOR ELEVATIONS - PARAPET ROOF						
A3.0	WALL SECTIONS						
A3.1	GENERAL CLADDING DETAILS - LAP SIDING & PANEL SIDING						
A3.2	GENERAL CLADDING DETAILS - STUCCO						
STRUCTURAL							
S1	COVER SHEET						
S1.1	WIND vs SNOW LIMITS						
S1.2	SEISMIC vs SNOW LIMITS						
S1.3	SEISMIC vs SNOW LIMITS - NO SOLAR OR ASPHALT REROOF						
S1.4	ALLOWABLE ACCESSORY OPTIONS						
S1.5	WALL CLADDING FASTENER REQUIREMENTS						
S2	WALL ELEVATIONS						
S3	SLAB-ON-GRADE FOUNDATION						
S4	FOUNDATION CONNECTION PLATE LAYOUT - STND ROOF						
S4.1	FOUNDATION CONNECTION PLATE LAYOUT - ROOF TRUSSES						
S5	FLOOR, WALL, ROOF PANEL PLAN AND DETAILS						
S5.1	INTERIOR PARTITION WALL CONNECTIONS						
S6	HINGE BEAM DETAILS						
S7	HINGE BEAM END PLATE AND WALL JT DETAILS						
S8	3:12 GABLE ROOF TRUSSES						
S9	3:12 GABLE ROOF TRUSS CONNECTION DETAILS						
S10	6:12 GABLE ROOF TRUSSES						
S11	6:12 GABLE ROOF TRUSS CONNECTION DETAILS						
S12	9:12 GABLE ROOF TRUSSES						
S13	9:12 GABLE ROOF TRUSS CONNECTION DETAILS						
S14	3:12 MONOSLOPE (SHED) ROOF TRUSSES						
S15	3:12 MONOSLOPE (SHED) ROOF CONNECTION DETAILS						
S16	3:12 QUAD HIP TRUSSES & CONNECTION DETAILS						
S17	TAPERED INSULATION ROOF PLAN						
S18	TAPERED INSULATION ROOF PLAN W/PARAPET						

DRAWING INDEX

Sheet Number	Sheet Title	REVISIONS 1	2	3	4	5	6
PLUMBING							
P1.0	PLUMBING NOTES, SYMBOLS, AND ABBREVIATIONS						
P2.0	PLUMBING PLANS (SHOWER)						
P2.1	ALTERNATE PLUMBING PLANS (BATHTUB)						
P3.0	PLUMBING DETAILS (SHOWER)						
P3.1	ALTERNATE PLUMBING DETAILS (BATHTUB)						
MECHANICAL							
M1.0	MECHANICAL NOTES, SYMBOLS, AND ABBREVIATIONS						
M2.0	MECHANICAL PLANS						
M3.0	MECHANICAL DETAILS						
ELECTRICAL							
E1.0	SYMBOL LIST, GENERAL NOTES & SPECIFICATIONS						
E2.0	ELECTRICAL PLANS						

DATE:	REV:	DESCRIPTION:

BOXABL INC.

5345 EAST NORTH BELT ROAD
NORTH LAS VEGAS, NV 89115, USA

+1(702) 500-9000 HELLO@BOXABL.COM

MODEL: 2 DOOR CASITA
BXB-000009

SHEET: G1.1 DRAWING INDEX

BOXABL

FACTORY SCOPE OF WORK

- ALL EXTERIOR AND INTERIOR WALLS, FLOORS AND ROOFS ARE PRE-BUILT IN THE FACTORY AND PRE-FINISHED. SOME TOUCH UP WORK MAY BE NECESSARY AT PANEL HINGE POINTS ON-SITE.
- ALL INTERIOR ELECTRICAL DEVICES ARE PRE-INSTALLED AND TESTED EXCEPT FOR SMOKE DETECTORS, INTERNAL PENDANT LIGHT, AND EXTERIOR SCONCE WHICH ARE PROVIDED BUT FIELD INSTALLED.
- ALL INTERIOR PLUMBING WATER LINES & DRAINS ARE FACTORY INSTALLED EXCEPT FOR THE REFRIGERATOR WATER LINE CONNECTION AND WASHER-DRYER INSTALLATION.
- ALL APPLIANCES EXCEPT FOR THE REFRIGERATOR AND WASHER-DRYER UNIT ARE PRE-INSTALLED. REFRIGERATOR AND WASHER-DRYER UNIT ARE INCLUDED BUT SITE-INSTALLED.
- OTHER MISCELLANEOUS COMPONENTS PER "CUSTOMER INSTALL KIT" ARE INCLUDED BUT MUST BE FIELD INSTALLED. THESE MAY INCLUDE BUT NOT BE LIMITED TO:
  - BREAKFAST BAR COUNTERTOP COMPONENTS
  - WASHER DRYER CABINET BOX
  - OVER THE REFRIGERATOR CABINET
  - MISC. ACCENT LIGHTING
  - SMOKE DETECTORS
  - INTERIOR AND EXTERIOR TRIM COMPONENTS

FIELD SCOPE OF WORK

- BOXABL UNITS ARE FABRICATED WITH A FLAT ROOF FOR SHIPPING. IT IS THE RESPONSIBILITY OF THE OWNER/INSTALLER TO INSTALL A CODE APPROVED PITCHED ROOF ON-SITE
- FOUNDATION SYSTEMS MAY BE REQUIRED BY YOUR LOCAL AHJ, SOME FOUNDATION DESIGNS ARE FOUND IN THIS PLAN SET, MORE CAN BE FOUND AT BOXABL.COM/FOUNDATIONS. IT IS THE OWNER'S RESPONSIBILITY TO HAVE AN APPROPRIATE FOUNDATION BUILT FOR THE SITE CONDITIONS
- THE OWNER IS RESPONSIBLE FOR CONNECTING BOXABL UNITS TO LOCAL UTILITIES. UTILITY CONNECTION SIZES & LOCATIONS CAN BE FOUND ON THE MEP SUBSEQUENT SHEETS.
- THE OWNER IS RESPONSIBLE FOR ERECTING THE BOXABL HINGED PANEL SYSTEM AND INTERLOCKING PANELS USING HARDWARE PROVIDED PER INSTALLATION INSTRUCTIONS SPECIFIC TO THEIR MODEL
- FINAL SHOWER INSTALLATION ON-SITE MAY BE REQUIRED SUCH AS PANEL INSTALLATION OR CAULKING. SEE SPECIFIC UNIT OWNERS MANUAL FOR DETAILS.
- THE OWNER IS RESPONSIBLE FOR THE INSTALLATION OF MISCELLANEOUS ITEMS WHICH MAY INCLUDE BUT ARE NOT LIMITED TO: THE BATHROOM MIRROR, BATHROOM DOOR, EXTERIOR LIGHT SCONCES, INTERIOR PENDANT LIGHT, SMOKE DETECTOR, REFRIGERATOR, WASHER DRYER UNIT, OVER THE FRIDGE CABINETRY & HIDE PANELS AND THE BREAKFAST BAR COUNTERTOP.
- FINISH + SEAL PLUMBING VENTS ON SITE. BOXABL TO PROVIDE FACTORY INSTALLED HUB FITTINGS IN ROOF PANELS TO ACCOMMODATE THE VERTICAL PLUMBING VENTS.

STRUCTURAL DESIGN CRITERIA

INSIGNIA OF APPROVAL INFORMATION:

- INSIGNIA NO: TO BE PROVIDED BY AHJ
- MANUFACTURER: BOXABL
- MODEL: BXB-000009
- UNIT SERIAL NUMBER: TO BE DETERMINED
- DATE OF MANUFACTURE: TO BE DETERMINED
- PLAN APPROVAL NO: SEE APPROVAL STAMP
- DESIGN ROOF LIVE LOAD: 20 PSF
- SEISMIC ZONE (CATEGORY): X
- DESIGN WIND LOAD: XXX MPH
- EXPOSURE: X

OTHER DESIGN CRITERIA:

- AUTOMATIC FIRE SPRINKLER SYSTEM: NO
- WILDLAND-URBAN INTERFACE FIRE ZONE: BUILDING IS NOT DESIGNED TO BE LOCATED IN A WILDLAND-URBAN INTERFACE FIRE AREA
- FIRE SUPPRESSION: AUTOMATIC FIRE SPRINKLERS ARE NOT PROVIDED. FIRE SPRINKLERS WILL BE REVIEWED AND INSTALLED UNDER LOCAL AUTHORITIES

CODE:2018 IBC

APPLIED LOADS

- ROOF LIVE LOAD: 20 PSF
- SNOW LOAD: SEE TABLE AT RIGHT FOR LIMITS AND SHEET S1.1
- ROOF DEAD LEAD: SIP ROOF: 4 PSF + 3 PSF ALLOTTED FOR SITE INSTALLED TPO.

  FOR HIGH-PITCHED ROOFS THE ADDITIONAL WEIGHT VARIES. SEE S1.2 FOR ROOFING MATERIAL WEIGHT LIMITS
- FLOOR LIVE LOAD: 40 PSF
- FLOOR DEAD LOAD: 5 PSF
- BASIC WIND SPEED: SEE LIMITS IN TABLE AT RIGHT.
  (ASD) QH = QZ = 16.0 PSF (MAX)
  ASEC7-16 26.10.2

SEISMIC FACTORS:

- I = 1 SEE TABLE AT RIGHT FOR Sms & Ss LIMITS
- SITE CLASS = D (default) Fa = 1.2 (MINIMUM)
- SEISMIC DESIGN CATEGORYY = E (MAX ALLOWED).
- BASIC SEISMIC FORCE RESISTING SYSEM = LIGHT - FRAMED WALLS w/SHEAR PANELS OF MGO & STEEL
- R = 6.5 PER ICC-ESR #4725
- ANALYSIS PROCEDURE: *EQUIV. LATERAL FORCE*

LIMITATIONS: WIND[2] - SNOW - SEISMIC[4]

SEE FOOTNOTE 6 & SHEET S1.1 FOR DETERMINATION OF WIND LOADS, SNOW LOADS & SEISMIC FACTORS AT SITE OF INSTALLATION		LOW PITCH ROOFS		HIGH PITCH ROOFS	
WIND EXPOSURE[1]		B	C	SEE SHEET S1.1 AND S1.2	
MAX. ALLOWED WIND SPEED[5]		140 mph	120 mph		
MAXIMUM ALLOWED GROUND SNOW LOAD (Pg)	SEISMIC CATEGORY A, B, C	40 psf[3]	40 psf[3]		
	SEISMIC CATEGORY D, E, F[4]	40 psf[3]	40 psf[3]	SEE SHEET S1.2	SEE SHEET S1.2
MAXIMUM ALLOWED SEISMIC S_{MS}	SEISMIC CATEGORY A, B, C[4]	3.00	3.00	.75 (HIGHER THAN THIS TRIGGERS CAT. D)	.75 (HIGHER THAN THIS TRIGGERS CAT. D)
	SEISMIC CATEGORY D,E, F[4]	3.00	3.00	SEE SHEET S1.2	SEE SHEET S1.2
MAXIMUM ALLOWED SEISMIC S_S	SEISMIC CATEGORY A, B, C[4]	2.50	2.50	.63 (HIGHER THAN THIS TRIGGERS CAT. D)	.63 (HIGHER THAN THIS TRIGGERS CAT. D)
	SEISMIC CATEGORY D,E, F[4]	2.50	2.50	SEE SHEET S1.2	SEE SHEET S1.2

1. EXPOSURE B IS URBAN AND SUBURBAN AREAS, WOODED AREAS, OR OTHER TERRAIN w/ NUMEROUS,CLOSELY SPACED OBSTRUCTIONS THAT HAVE A SIZE OF A SINGLE-FAMILY DWELLING. THESE CONDITIONS PREVAIL IN THE UPWIND DIRECTION FOR A DISTANCE GREATER THAN 1,500 FT.

   EXPOSURE C IS OPEN TERRAIN w/ SCATTERED OBSTRUCTIONS THAT HAVE HEIGHTS GENERALLY LESS THAN 30 FT. THIS INCLUDES FLAT, OPEN COUNTRY AND GRASSLANDS.

   EXPOSURE D (NOT ALLOWED) IS FLAT, UNOBSTRUCTED AREAS (MUD FLATS, SALT FLATS) AND WATER SURFACES. THESE CONDITIONS PREVAIL IN THE UPWIND DIRECTION FOR A DISTANCE > 5,000 FT. THIS EXPOSURE ALSO APPLIES WHERE EXPOSURE B OR C OCCURS WITHIN THE FIRST 600 FT OF THE SITE.
2. CASITAS LOCATED ON HILLS OR WITHIN 1,000 FT OF AN ESCARPMENT WILL REQUIRE SPECIAL EVALUATION BY THE STRUCTURAL ENGINEER.
3. IF LOCATED TIGHT IN AMONG CONIFER TREES MULTIPLY LOAD BY 0.83
4. IF SEISMIC FACTOR Ss ≥ .75 / Fa (Fa = 1.2 MIN.) OR, IF SD1 ≥ .2, THEN THE SITE IS CATEGORY "D" OR GREATER. SEE FOOTNOTE 6 FOR HOW TO DETERMINE THESE SEISMIC FACTORS.
5. BASIC (ULTIMATE) WIND SPEED AS DEFINED BY THE INTERNATIONAL BUILDING CODE.
6. FIND WIND SPEED, GROUND SNOW LOAD AND SEISMIC Sms & Ss VALUES AT ASCEHAZARDTOOL.ORG USING ASCE/SEI 7-16, RISK CATEGORY II, ASSUMED SOIL CLASS "D". VERIFY BASIC (ULTIMATE) WIND AND GROUND SNOW LOAD VALUES WITH THE LOCAL OR COUNTY BUILDING DEPARTMENT. CUSTOMER IS RESPONSIBLE FOR VERIFYING THEIR WIND, SNOW & SEISMIC FACTORS ARE WITHIN THE ALLOWABLE LIMITS IN TABLE ABOVE.

DATE:	REV:	DESCRIPTION:

BOXABL INC.

5345 EAST NORTH BELT ROAD
NORTH LAS VEGAS, NV 89115, USA

+1(702) 500-9000 HELLO@BOXABL.COM

MODEL: 2 DOOR CASITA BXB-000009

SHEET: G1.2 SCOPE OF WORK AND DESIGN CRITERIA

BOXABL

PRE-CONSTRUCTION DISCLOSURE (DELINEATION OF PLAN REVIEW AND INSPECTION)

CALIFORNIA FACTORY-BUILT HOUSING

BXB-000009 - 2 DOOR CASITA - CALIFORNIA	BOXABL					
SECTION / DESCRIPTION	PLAN REVIEW		CODE SECTION	INSPECTION		CODE SECTION
	DAA	LEA		QAA	LEA	
FBH COMPLIANCE WITH TITLE 24, CCR PARTS 2, 2.5, 3, 4, 5, 6, 11	X		TITLE 25, CCR §3070	X	X	TITLE 25, CCR §3070 HSC §19992
DESIGN CODES, DESIGN LOADS, DESIGN CRITERIA	X		TITLE 25, CCR §3070	X		TITLE 25, CCR §3070
COMPLIANCE WITH LOCAL PLANNING AND ZONING REQUIREMENTS, INCLUDES: - LOCAL ZONE USE REQUIREMENTS - LOCAL SNOW LOAD REQUIREMENTS - LOCAL WIND PRESSURE REQUIREMENTS - STATE FIRE ZONE REQUIREMENTS - LOCAL FIRE ZONE REQUIREMENTS - BUILDING SETBACK REQUIREMENTS - SIDE AND REAR YARD REQUIREMENTS - SITE DEVELOPMENT REQUIREMENTS - PROPERTY LINE REQUIREMENTS - ARCHITECTURAL AND AESTHETIC REQUIREMENTS		X	HSC §19993		X	HSC §19993
INSTALLATION INSTRUCTIONS AND DETAILS	X		TITLE 25, CCR §3028		X	HSC §19992
MECHANICAL, ELECTRICAL, PLUMBING, STRUCTURAL, FIRE SAFETY, FIRE PROTECTION, FIRE ALARM SYSTEMS AND COMPLIANCE WITH CALIFORNIA GREEN AND ENERGY CODES; FACTORY-BUILT COMPONENTS	X		TITLE 25, CCR §3070	X		TITLE 25, CCR §3070
MECHANICAL, ELECTRICAL, PLUMBING, STRUCTURAL, FIRE SAFETY, FIRE PROTECTION, FIRE ALARM SYSTEMS AND COMPLIANCE WITH CALIFORNIA GREEN AND ENERGY CODES; INTER-MODULAR CONNECTIONS	X		TITLE 25, CCR §3070		X	HSC §19992
MECHANICAL, ELECTRICAL, PLUMBING, STRUCTURAL, FIRE SAFETY, FIRE PROTECTION, FIRE ALARM SYSTEMS AND COMPLIANCE WITH CALIFORNIA GREEN AND ENERGY CODES; SITE-BUILT COMPONENTS		X	TITLE 25, CCR §3070		X	HSC §19992
GRADING AND EXCAVATION		X			X	HSC §19992
SITE PLAN: FOR THE ONLY PURPOSE OF CHECKING FIRE-RATING OF EXTERIOR WALLS	X		TITLE 25, CCR §3070	X		TITLE 25, CCR §3070
SITE PLAN: ALL OTHER ELEMENTS OF SITE PLAN		X	HSC §19993		X	HSC §19993
CUSTOM FOUNDATIONS		X	TITLE 25, CCR §3028		X	HSC §19992
PRE-APPROVED FOUNDATIONS	X				X	
FACTORY-BUILT UNITS CONNECTIONS TO THE FOUNDATION	X		TITLE 25, CCR §3028		X	HSC §19992
FACTORY-BUILT UNITS CONNECTIONS TO SITE-BUILT STRUCTURES	X		TITLE 25, CCR §3028		X	HSC §19992
FIRE SPRINKLERS (IF REQUIRED)		X	TITLE 25, CCR §3070		X	HSC §19992
SITE -BUILT STRUCTURES (BASEMENTS, DECKS, GARAGES, STAIRS, RAMPS, RAILS, ETC.)		X			X	HSC §19992
CONNECTIONS TO PUBLIC UTILITIES		X			X	HSC §19992
ALL FINISH WORK THAT WAS NOT INCLUDED IN THE FACTORY-BUILT UNITS OR REQUIRED TO BE DONE AFTER INSTALLATION (PAINTING, FLOORING, ROOFING, SIGNAGE, ETC.)	X		TITLE 25, CCR §3028		X	HSC §19992
CUSTOM PITCHED OR TRUSSED ROOF CONSTRUCTION AND ROOFING		X			X	
PRE-APPROVED PITCHED OR TRUSSED ROOF CONSTRUCTION & ROOFING	X				X	
EXTENSION OF VENT PIPES THROUGH AND ABOVE SITE INSTALLED PITCHED OR TRUSSED ROOF	X				X	
INSTALLATION AND TESTING OF SMOKE DETECTOR - CO ALARM COMBO	X				X	
INSTALLATION AND TESTING OF OUTDOOR HVAC CONDENSING UNIT	X				X	
FLUSHING OF PEX LINES	X				X	CA PLUM CODE 604.1.2

NOTES:

1. WHEN DRAWINGS AND OTHER DOCUMENTS INCLUDE BOTH FACTORY BUILT AND SITE BUILT CONSTRUCTION, DAA'S APPROVAL STAMP APPLIES ONLY THE ITEMS MARKED TO BE REVIEWED BY DAA IN THE LIST ABOVE.
2. FOR ANY ITEMS NOT INCLUDED IN THE LIST ABOVE, PLAN REVIEW AND INSPECTION WILL BE ACCORDING TO THE FOLLOWING RULES:
   - 2.A. FACTORY BUILT ELEMENTS WILL BE REVIEWED BY DAA AND INSPECTED BY QAA
   - 2.B. CONNECTIONS BETWEEN FACTORY BUILT COMPONENTS OR BETWEEN FACTORY BUILT AND SITE BUILT COMPONENTS WILL BE REVIEWED BY DAA AND INSPECTED BY LEA.
   - 2.C. SITE BUILT ELEMENTS WILL BE REVIEWED AND INSPECTED BY LEA EXCEPT FOR STRUCTURAL (SEE FOOTNOTE 3)
3. STRUCTURAL DRAWINGS AND CALCULATIONS (EXCLUDING FOUNDATIONS) WILL BE ENTIRELY REVIEWED BY DAA TO MAINTAIN THE TRUCTURAL INTEGRITY OF THE STRUCTURE.
   - 3.A. LEA WILL REVIEW FOUNDATION PLANS AND CALCULATIONS.
   - 3.B. QAA WILL INSPECT FACTORY BUILT STRUCTURAL ELEMENTS.
   - 3.C. LEA WILL INSPECT ALL FIELD CONSTRUCTION AND CONNECTIONS.
4. ALL OTHER SITE WORK NOTE MENTIONED ABOVE WILL BE REVIEWED AND INSPECTED BY LEA
5. SEE PRE-APPROVED FOUNDATION & ROOF DESIGNS ON STRUCTURAL SHEETS

ABBREVIATIONS

FBH	FACTORY-BUILT HOUSING
HCD	CALIFORNIA DEPARTMENT OF HOUSING AND COMMUNITY DEVELOPMENT
DAA	HCD APPROVED DESIGN APPROVAL AGENCY
QAA	HCD APPROVED QUALITY ASSURANCE AGENCY
LEA	LOCAL ENFORCING AGENCY

DATE:	REV:	DESCRIPTION:

BOXABL INC.

5345 EAST NORTH BELT ROAD
NORTH LAS VEGAS, NV 89115, USA

+1(702) 500-9000 HELLO@BOXABL.COM

MODEL: 2 DOOR CASITA
BXB-000009

SHEET: G1.3 PRE-CONSTRUCTION DISCLOSURE

BOXABL

LEGEND

- KEY NOTE
- WINDOW TAG SEE A1.0
- SIP PANEL
- DOOR TAG SEE A1.0
- INTERIOR WALL

FLOOR PLAN KEYNOTES

1	WALL MOUNTED SMOKE DETECTOR 20' AWAY FROM COOKING APPLIANCE
2	VENTLESS COMBO WASHER/DRYER UNIT
3	WASHER OUTLET BOX. RUN HOSES THRU PARTITIONS TO CONNECT TO WASHER/DRYER UNIT
4	30" x 60" SHOWER WITH 2" CURB. SEE SHEET P2.0 + P3.0 FOR SHOWER; SHEET P2.1 +P3.1 FOR BATHTUB
5	BATHTUB AND/OR SHOWER FLOORS OR WALLS SHALL BE FINISHED WITH A NON-ABSORBENT SURFACE 6'-0" A.F.F.

NOTES

- SEE MANUFACTURER'S DRAWINGS FOR UTILITY CONNECTIONS, PANEL DETAILS, MODULAR CONNECTIONS & ALL RELATED STRUCTURAL DETAILS
- FINAL DIMENSIONS ARE WITHIN ± 1" OF DIMENSIONS SHOWN BASED ON MANUFACTURING TOLERANCES

NATURAL LIGHT SCHEDULE (8% REQUIRED)

BASED OFF 2018 IRC, SECTION R303.1

ROOM	TOTAL SQ. FT.	NATURAL LIGHT PROVIDED	NATURAL LIGHT REQUIRED	ACTUAL PERCENTAGE
LIVING AREA	208 SF	54 SF	16.64 SF	26%
KITCHEN	66 SF	12 SF	5.28 SF	18%
TOILET	44 SF	6 SF *	1.32 SF	13%

NATURAL VENTILATION SCHEDULE (4% REQUIRED)

BASED OFF 2018 IRC, SECTION R303.1
LIVING ROOM & KITCHEN CONSIDERED AN ADJOINING SPACE

ROOM	TOTAL SQ. FT.	WINDOW VENT SQ. FT. PROVIDED	VENTILATION REQUIRED	ACTUAL PERCENTAGE
LIVING AREA	274 SF	27 SF	11 SF	9.9%
KITCHEN				
TOILET	44 SF	0 SF *	MECH. VENTED 70 CFM	N/A

* ARTIFICIAL LIGHT AND VENTILATION PROVIDED PER EXCEPTION OF IRC SECTION R303.3

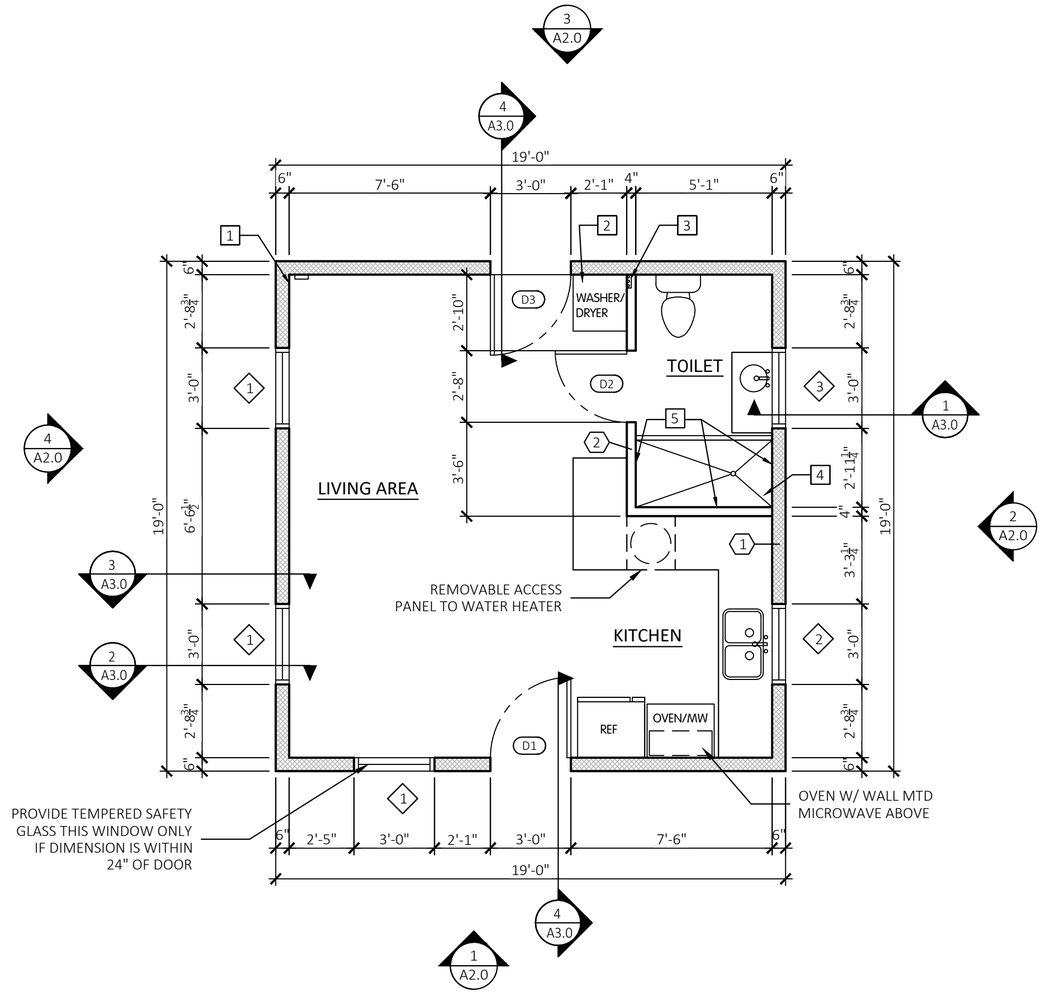

1 A1.0 FLOOR PLAN
SCALE: 1/4" = 1'-0"

WINDOW & DOOR SCHEDULE

NUMBER	PRODUCT	CONFIGURATION	SIZE	MATERIAL	U-FACTOR	SOLAR HEAT GAIN (SHGC)	DPI	NOTES
1	WINDOW	SINGLE HUNG	3'-0" X 6'-0"	VINYL	0.29	0.23	+20/-20	
2	WINDOW	FIXED	3'-0" X 4'-0"	VINYL	0.26	0.25	+20/-20	
3	WINDOW	FIXED	3'-0" X 2'-0"	VINYL	0.26	0.25	+20/-20	
D1	DOOR	ENTRY DOOR	3'-0" X 8'-0"	FIBERGLASS	0.17	0	+55/-60	
D2	DOOR	TOILET DOOR	2'-8" X 8'-0"		0	0	0	SWINGING DOOR
D3	DOOR	REAR DOOR	3'-0 X 8'-0"	FIBERGLASS	0.17	0	+55/-60	

DATE:	REV:	DESCRIPTION:

BOXABL INC.

5345 EAST NORTH BELT ROAD
NORTH LAS VEGAS, NV 89115, USA

+1(702) 500-9000 HELLO@BOXABL.COM

MODEL: 2 DOOR CASITA
BXB-000009

SHEET: A1.0 FLOOR PLAN

BOXABL

FOAM WEDGE ROOF (1/4:12 SLOPE):
2-1/2" TH @ ROOF EDGES; 5" TH @ CENTER

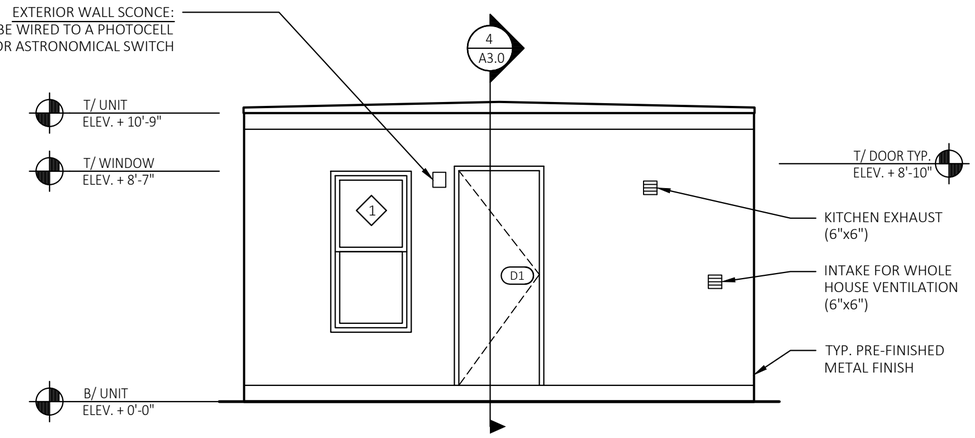

1 / A2.0 FRONT ELEVATION *OPENING PERCENTAGE = 20.56%*
SCALE: 1/4" = 1'-0"

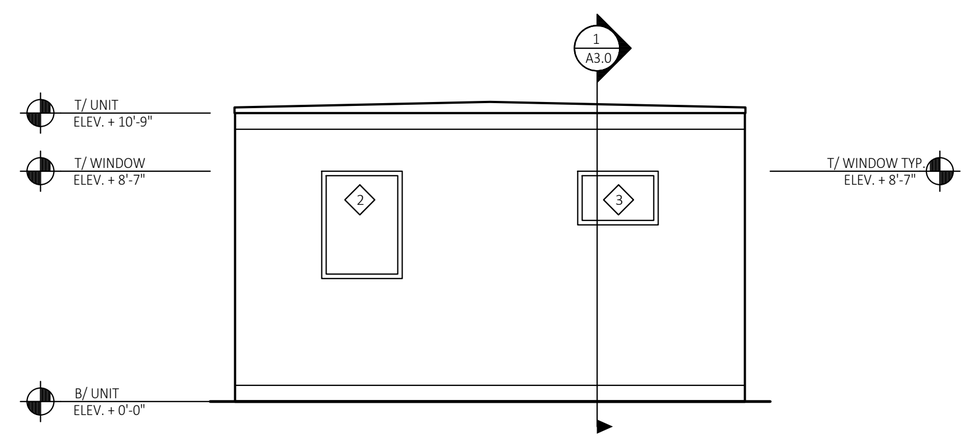

2 / A2.0 RIGHT ELEVATION *OPENING PERCENTAGE = 8.81%*
SCALE: 1/4" = 1'-0"

EXTERIOR FINISHES:
24 GAUGE METAL PANEL
INSTALLED BY MANUFACTURER

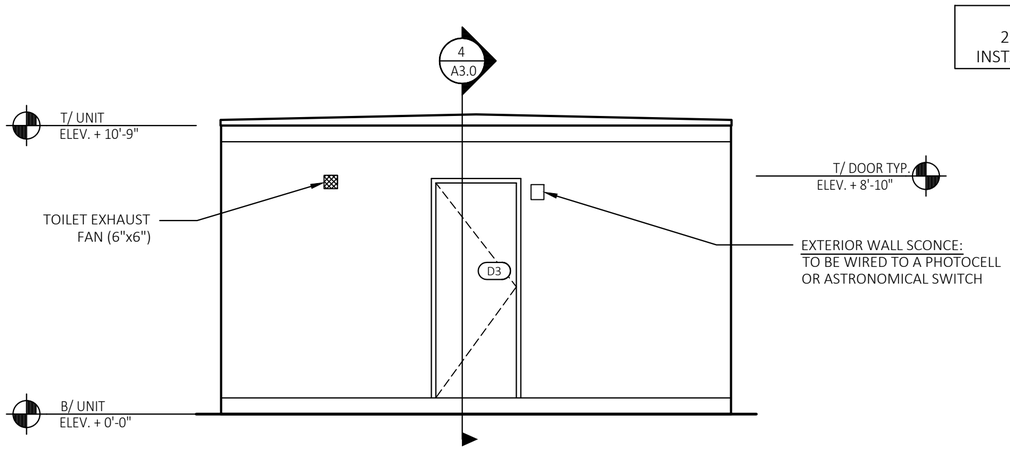

3 / A2.0 REAR ELEVATION *OPENING PERCENTAGE = 11.75%*
SCALE: 1/4" = 1'-0"

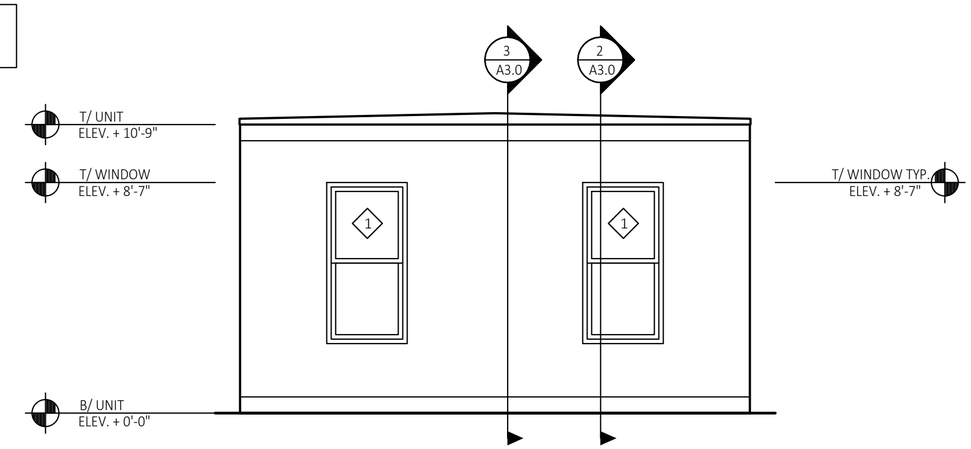

4 / A2.0 LEFT ELEVATION *OPENING PERCENTAGE = 17.62%*
SCALE: 1/4" = 1'-0"

MAXIMUM AREA OF EXT. WALL OPENINGS AND FIRE SEPARATION DISTANCE / DEGREE OF OPENING PROTECTION		
BASED OFF IRC TABLE R302.1 (1) EXT. WALLS		
FIRE SEPARATION DISTANCE (FEET)	DEGREE OF OPENING PROTECTION	ALLOWABLE AREA
0 TO LESS THAN 3	UNPROTECTED, NONSPRINKLERED	NOT PERMITTED
3 TO LESS THAN 5	UNPROTECTED, NONSPRINKLERED	NOT PERMITTED
5 TO LESS THAN 10	UNPROTECTED, NONSPRINKLERED	10%
10 TO LESS THAN 15	UNPROTECTED, NONSPRINKLERED	15%
15 TO LESS THAN 20	UNPROTECTED, NONSPRINKLERED	25%

NOTE:
ALL INTAKES, GRILLES, + LOUVERS TO BE PROTECTED W/CORROSION RESISTANT SCREENS NOT LESS THAN 1/4" & NOT MORE THAN 1/2" IN SIZE

NOTE:
FIELD INSTALL WEATHER BARRIER FLASHING TAPE TO ALL PANEL SEAMS. REFER TO MANUFACTURER'S INSTALLATION MANUAL FOR DETAILS AND RECOMMENDATIONS

GENERAL EXTERIOR WALL SIDING NOTES (REFER TO A3.1 + A3.2 FOR CLADDING DETAILS):
CEMENT PLASTER (MAX. WT = 6 PSF) OR CEMENT FIBER PANELS (HARDIE, LP, OR SIMILAR) ARE ACCEPTABLE OPTIONS.

FOR CEMENT PLASTER: ATTACHED LATH OVER PAPER BACKING TO WALL WITH WAFER HEAD STYLE #10 SELF-PIERCING SHEET METAL SCREWS AT 9" OC EA WAY.

ATTACHMENT FOR CEMENT FIBER PANELS: WAFER HEAD STYLE #10 SELF-PIERCING SHEET METAL SCREWS AT 9" O.C. EA WAY.

FASTENERS IN BOTH CASES SHOULD BE CORROSION RESISTANT, GALVANIZED, OR STAINLESS STEEL. STAINLESS STEEL IS PARTICULARLY IMPORTANT FOR LOCATIONS NEAR THE OCEAN, LARGE LAKE, OR IN VERY HUMID CLIMATES.

CEMENT PLASTER AND CEMENT FIBER PANELS TO BE INSTALLED PER THE MANUFACTURER'S INSTALLATION PROCEDURES. CLADDING DETAILS ARE SHOWN ON THE SITE-SPECIFIC ARCHITECTURAL DRAWINGS.

DATE:	REV:	DESCRIPTION:

BOXABL INC.

5345 EAST NORTH BELT ROAD
NORTH LAS VEGAS, NV 89115, USA

+1(702) 500-9000 HELLO@BOXABL.COM

MODEL: 2 DOOR CASITA
BXB-000009

SHEET: A2.0 EXTERIOR ELEVATIONS - FOAM WEDGE ROOF

BOXABL

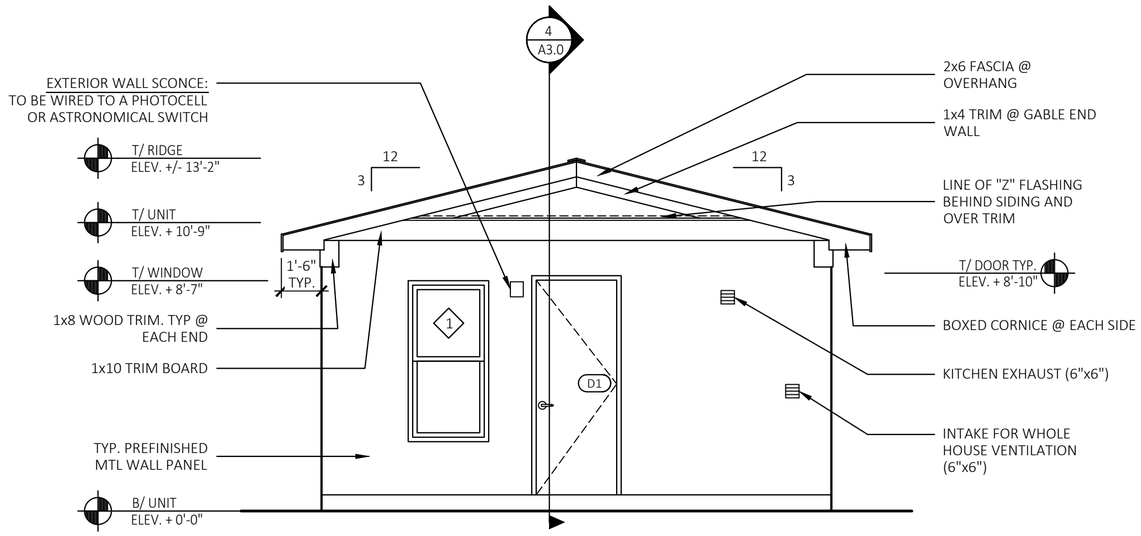

1 / A2.1 FRONT ELEVATION

SCALE: 1/4" = 1'-0"

OPENING PERCENTAGE = 20.56%

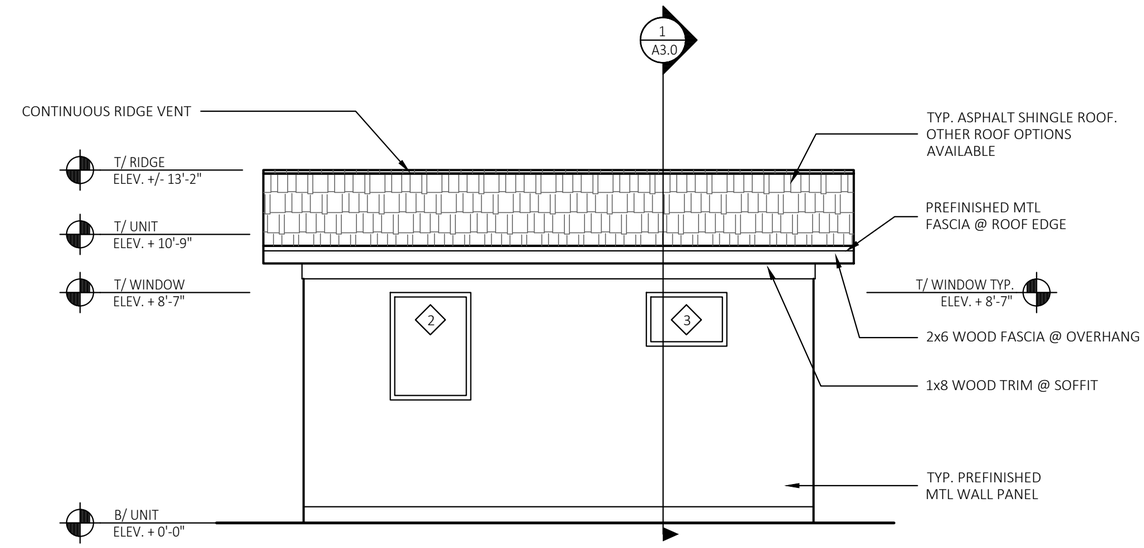

2 / A2.1 RIGHT ELEVATION

SCALE: 1/4" = 1'-0"

OPENING PERCENTAGE = 8.81%

EXTERIOR FINISHES:
24 GAUGE METAL PANEL
INSTALLED BY MANUFACTURER

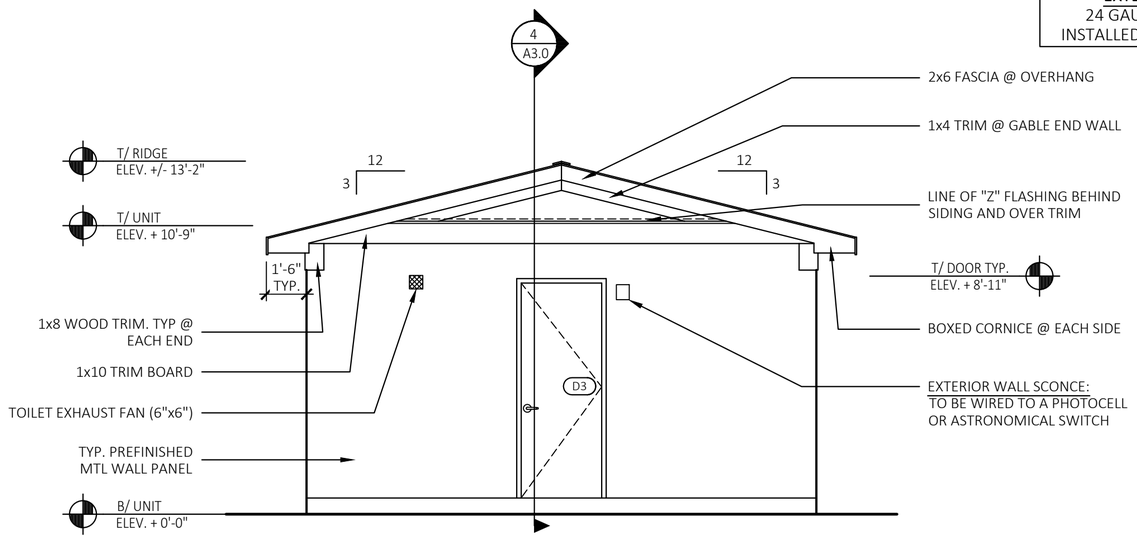

3 / A2.1 REAR ELEVATION

SCALE: 1/4" = 1'-0"

OPENING PERCENTAGE = 11.75%

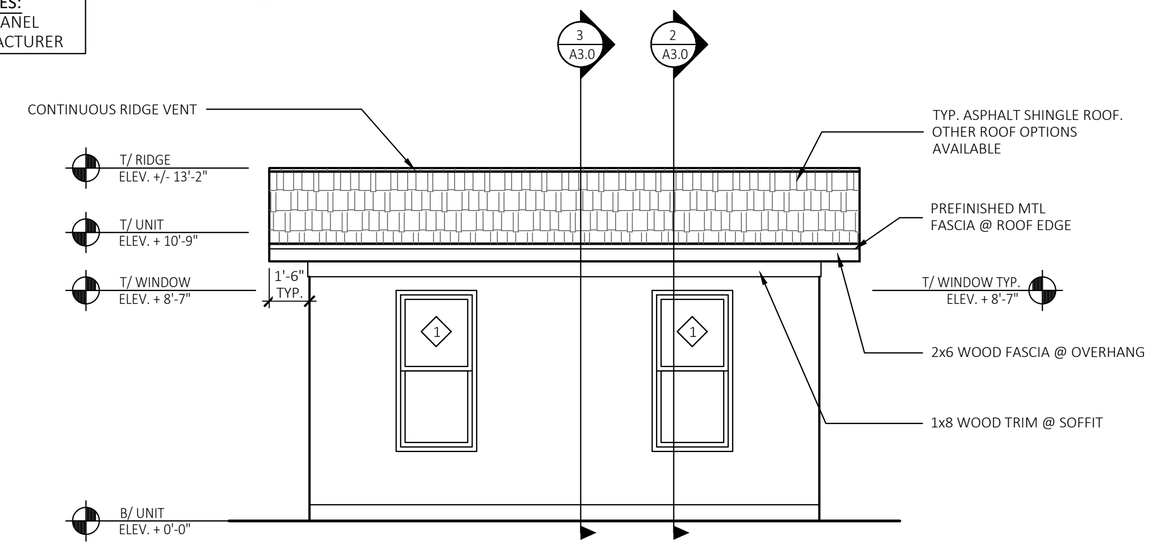

4 / A2.1 LEFT ELEVATION

SCALE: 1/4" = 1'-0"

OPENING PERCENTAGE = 17.62%

MAXIMUM AREA OF EXT. WALL OPENINGS AND FIRE SEPARATION DISTANCE / DEGREE OF OPENING PROTECTION

BASED OFF IRC TABLE R302.1 (1) EXT. WALLS

FIRE SEPARATION DISTANCE (FEET)	DEGREE OF OPENING PROTECTION	ALLOWABLE AREA
0 TO LESS THAN 3	UNPROTECTED, NONSPRINKLERED	NOT PERMITTED
3 TO LESS THAN 5	UNPROTECTED, NONSPRINKLERED	NOT PERMITTED
5 TO LESS THAN 10	UNPROTECTED, NONSPRINKLERED	10%
10 TO LESS THAN 15	UNPROTECTED, NONSPRINKLERED	15%
15 TO LESS THAN 20	UNPROTECTED, NONSPRINKLERED	25%

GABLE ROOF 3:12 SLOPE
46.7 & 70 PSF SNOW LOADS.

THESE ARE TRUSS CAPACITIES ONLY...ALLOWABLE ROOF SNOW LOADS BASED ON WALL STRENGTH ARE OFTEN LESS, DEPENDING ON WIND AND SEISMIC CONDITIONS. GROUND SNOW LOADS ARE ABOUT 43% HIGHER. SEE S1.1, S1.2 AND S1.3

NOTE:
ALL INTAKES, GRILLES, + LOUVERS TO BE PROTECTED W/CORROSION RESISTANT SCREENS NOT LESS THAN 1/4" & NOT MORE THAN 1/2" IN SIZE

NOTE:
FIELD INSTALL WEATHER BARRIER FLASHING TAPE TO ALL PANEL SEAMS. REFER TO MANUFACTURER'S INSTALLATION MANUAL FOR DETAILS AND RECOMMENDATIONS

GENERAL EXTERIOR WALL SIDING NOTES (REFER TO A3.1 + A3.2 FOR CLADDING DETAILS):
CEMENT PLASTER (MAX. WT = 6 PSF) OR CEMENT FIBER PANELS (HARDIE, LP, OR SIMILAR) ARE ACCEPTABLE OPTIONS.

FOR CEMENT PLASTER: ATTACHED LATH OVER PAPER BACKING TO WALL WITH WAFER HEAD STYLE #10 SELF-PIERCING SHEET METAL SCREWS AT 9" OC EA WAY.

ATTACHMENT FOR CEMENT FIBER PANELS: WAFER HEAD STYLE #10 SELF-PIERCING SHEET METAL SCREWS AT 9" O.C. EA WAY.

FASTENERS IN BOTH CASES SHOULD BE CORROSION RESISTANT, GALVANIZED, OR STAINLESS STEEL. STAINLESS STEEL IS PARTICULARLY IMPORTANT FOR LOCATIONS NEAR THE OCEAN, LARGE LAKE, OR IN VERY HUMID CLIMATES.

CEMENT PLASTER AND CEMENT FIBER PANELS TO BE INSTALLED PER THE MANUFACTURER'S INSTALLATION PROCEDURES. CLADDING DETAILS ARE SHOWN ON THE SITE-SPECIFIC ARCHITECTURAL DRAWINGS.

DATE:	REV:	DESCRIPTION:

BOXABL INC.

5345 EAST NORTH BELT ROAD
NORTH LAS VEGAS, NV 89115, USA

+1(702) 500-9000 HELLO@BOXABL.COM

MODEL: 2 DOOR CASITA
BXB-000009

SHEET: A2.1 EXTERIOR ELEVATIONS - GABLE ROOF

BOXABL

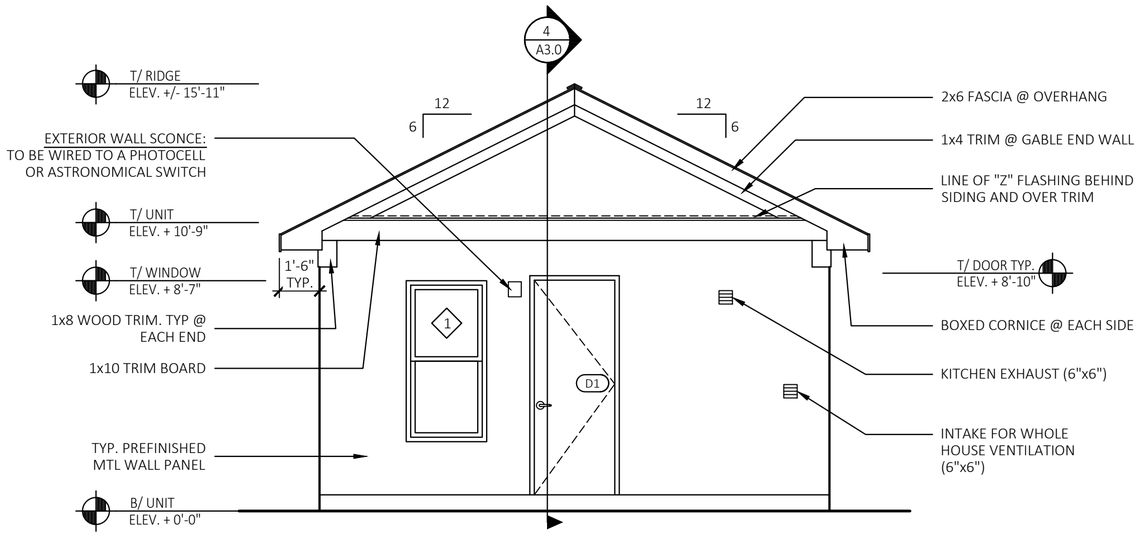

1 / A2.2 FRONT ELEVATION *OPENING PERCENTAGE = 20.56%*
SCALE: 1/4" = 1'-0"

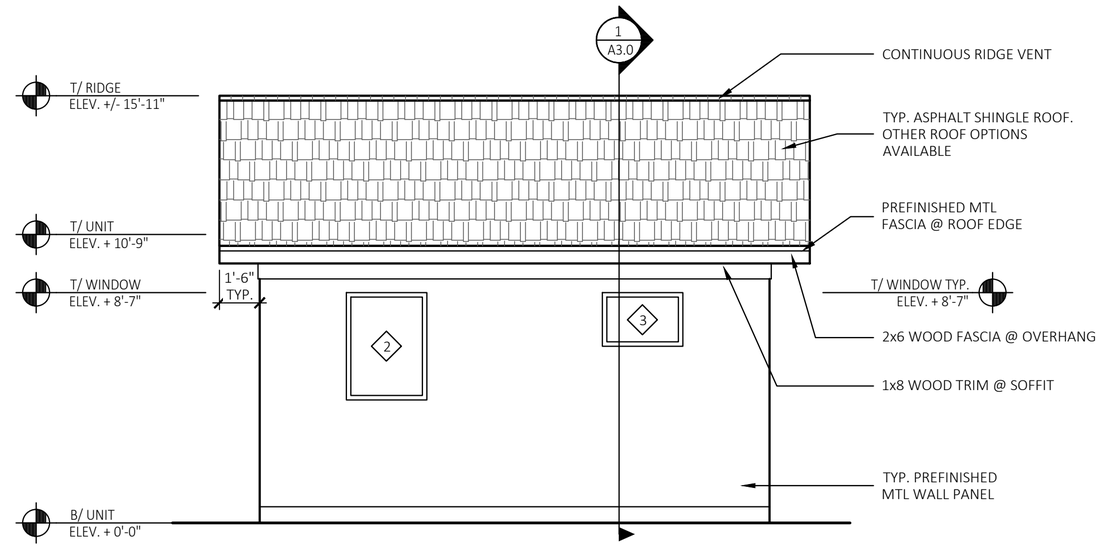

2 / A2.2 RIGHT ELEVATION *OPENING PERCENTAGE = 8.81%*
SCALE: 1/4" = 1'-0"

EXTERIOR FINISHES:
24 GAUGE METAL PANEL
INSTALLED BY MANUFACTURER

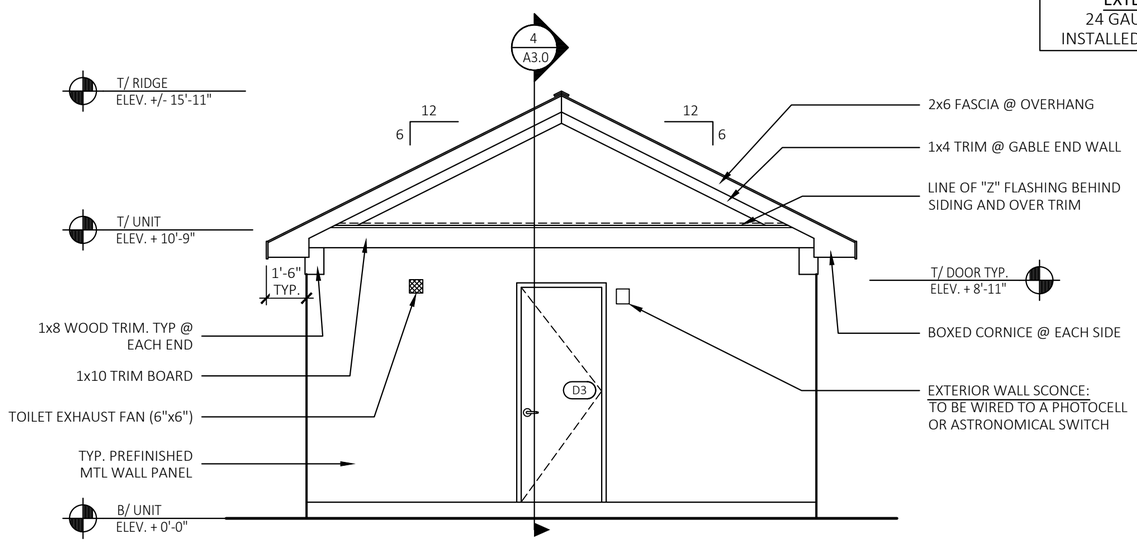

3 / A2.2 REAR ELEVATION *OPENING PERCENTAGE = 11.75%*
SCALE: 1/4" = 1'-0"

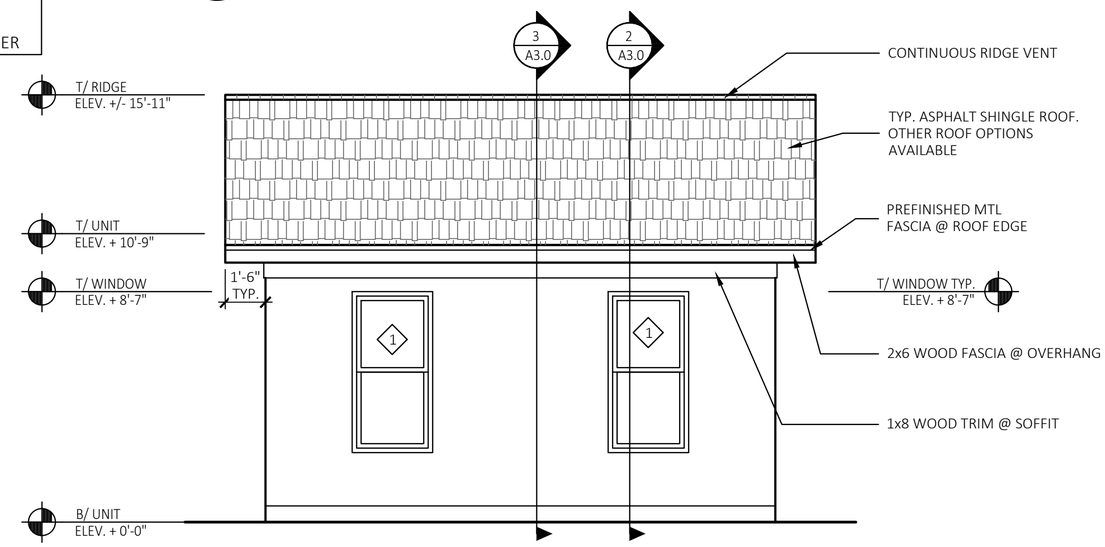

4 / A2.2 LEFT ELEVATION *OPENING PERCENTAGE = 17.62%*
SCALE: 1/4" = 1'-0"

MAXIMUM AREA OF EXT. WALL OPENINGS AND FIRE SEPARATION DISTANCE / DEGREE OF OPENING PROTECTION

BASED OFF IRC TABLE R302.1 (1) EXT. WALLS

FIRE SEPARATION DISTANCE (FEET)	DEGREE OF OPENING PROTECTION	ALLOWABLE AREA
0 TO LESS THAN 3	UNPROTECTED, NONSPRINKLERED	NOT PERMITTED
3 TO LESS THAN 5	UNPROTECTED, NONSPRINKLERED	NOT PERMITTED
5 TO LESS THAN 10	UNPROTECTED, NONSPRINKLERED	10%
10 TO LESS THAN 15	UNPROTECTED, NONSPRINKLERED	15%
15 TO LESS THAN 20	UNPROTECTED, NONSPRINKLERED	25%

GABLE ROOF 6:12 SLOPE
46.7 & 70 PSF SNOW LOADS.

THESE ARE TRUSS CAPACITIES ONLY...ALLOWABLE ROOF SNOW LOADS BASED ON WALL STRENGTH ARE OFTEN LESS, DEPENDING ON WIND AND SEISMIC CONDITIONS. GROUND SNOW LOADS ARE ABOUT 43% HIGHER. SEE S1.1, S1.2 AND S1.3

NOTE:
ALL INTAKES, GRILLES, + LOUVERS TO BE PROTECTED W/CORROSION RESISTANT SCREENS NOT LESS THAN 1/4" & NOT MORE THAN 1/2" IN SIZE

NOTE:
FIELD INSTALL WEATHER BARRIER FLASHING TAPE TO ALL PANEL SEAMS. REFER TO MANUFACTURER'S INSTALLATION MANUAL FOR DETAILS AND RECOMMENDATIONS

GENERAL EXTERIOR WALL SIDING NOTES (REFER TO A3.1 + A3.2 FOR CLADDING DETAILS):
CEMENT PLASTER (MAX. WT = 6 PSF) OR CEMENT FIBER PANELS (HARDIE, LP, OR SIMILAR) ARE ACCEPTABLE OPTIONS.

FOR CEMENT PLASTER: ATTACHED LATH OVER PAPER BACKING TO WALL WITH WAFER HEAD STYLE #10 SELF-PIERCING SHEET METAL SCREWS AT 9" OC EA WAY.

ATTACHMENT FOR CEMENT FIBER PANELS: WAFER HEAD STYLE #10 SELF-PIERCING SHEET METAL SCREWS AT 9" O.C. EA WAY.

FASTENERS IN BOTH CASES SHOULD BE CORROSION RESISTANT, GALVANIZED, OR STAINLESS STEEL. STAINLESS STEEL IS PARTICULARLY IMPORTANT FOR LOCATIONS NEAR THE OCEAN, LARGE LAKE, OR IN VERY HUMID CLIMATES.

CEMENT PLASTER AND CEMENT FIBER PANELS TO BE INSTALLED PER THE MANUFACTURER'S INSTALLATION PROCEDURES. CLADDING DETAILS ARE SHOWN ON THE SITE-SPECIFIC ARCHITECTURAL DRAWINGS.

DATE:	REV:	DESCRIPTION:

BOXABL INC.

5345 EAST NORTH BELT ROAD
NORTH LAS VEGAS, NV 89115, USA

+1(702) 500-9000 HELLO@BOXABL.COM

MODEL: 2 DOOR CASITA
BXB-000009

SHEET: A2.2 EXTERIOR ELEVATIONS - GABLE ROOF

BOXABL

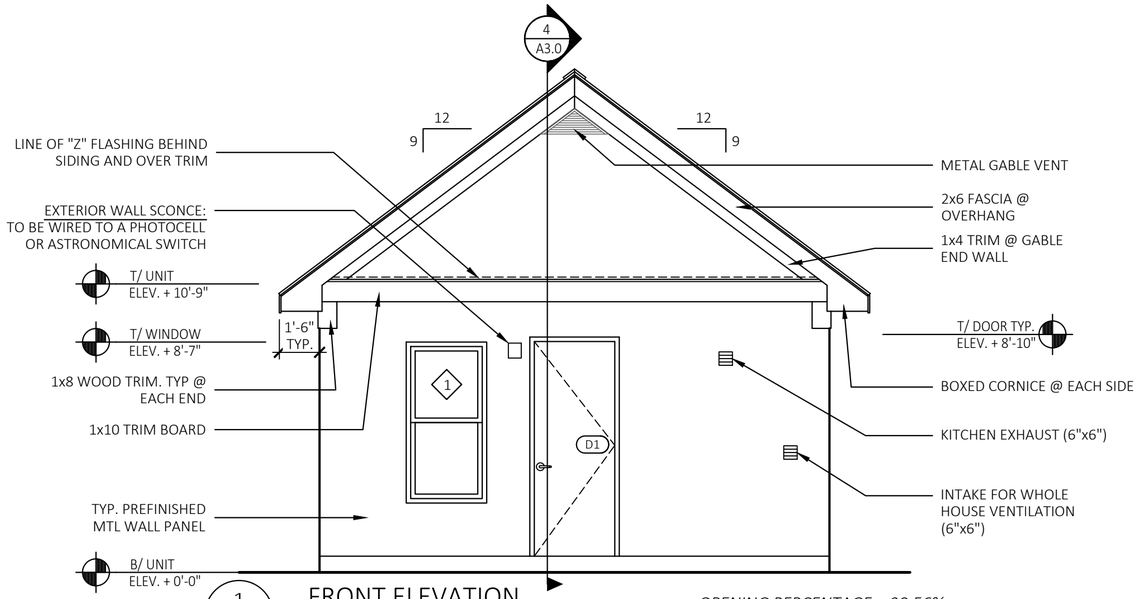

1 A2.3 FRONT ELEVATION

SCALE: 1/4" = 1'-0"

OPENING PERCENTAGE = 20.56%

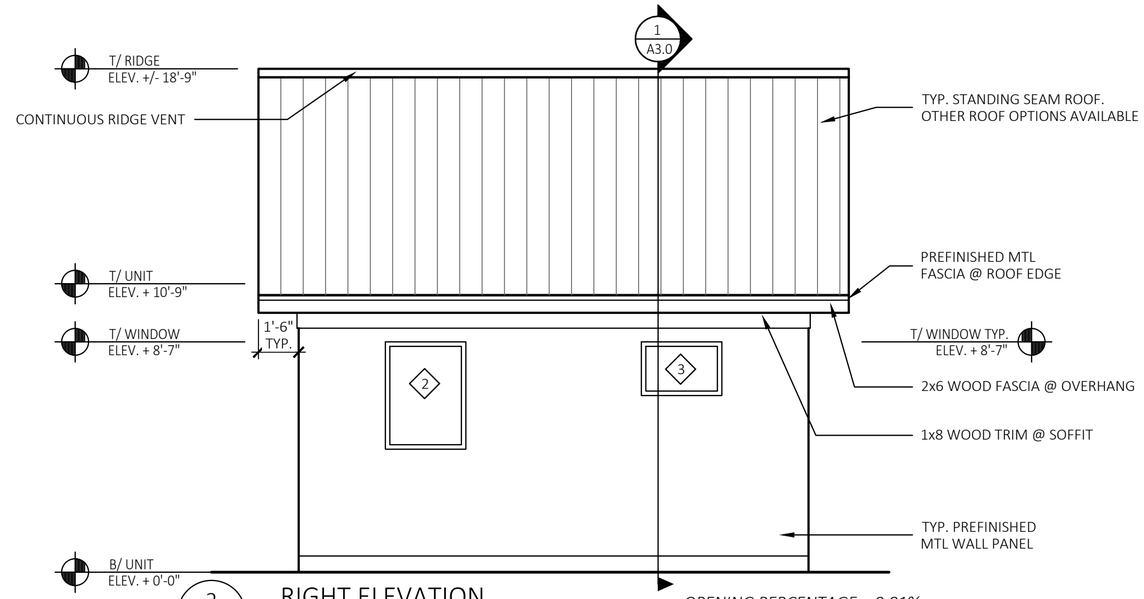

2 A2.3 RIGHT ELEVATION

SCALE: 1/4" = 1'-0"

OPENING PERCENTAGE = 8.81%

EXTERIOR FINISHES:
24 GAUGE METAL PANEL
INSTALLED BY MANUFACTURER

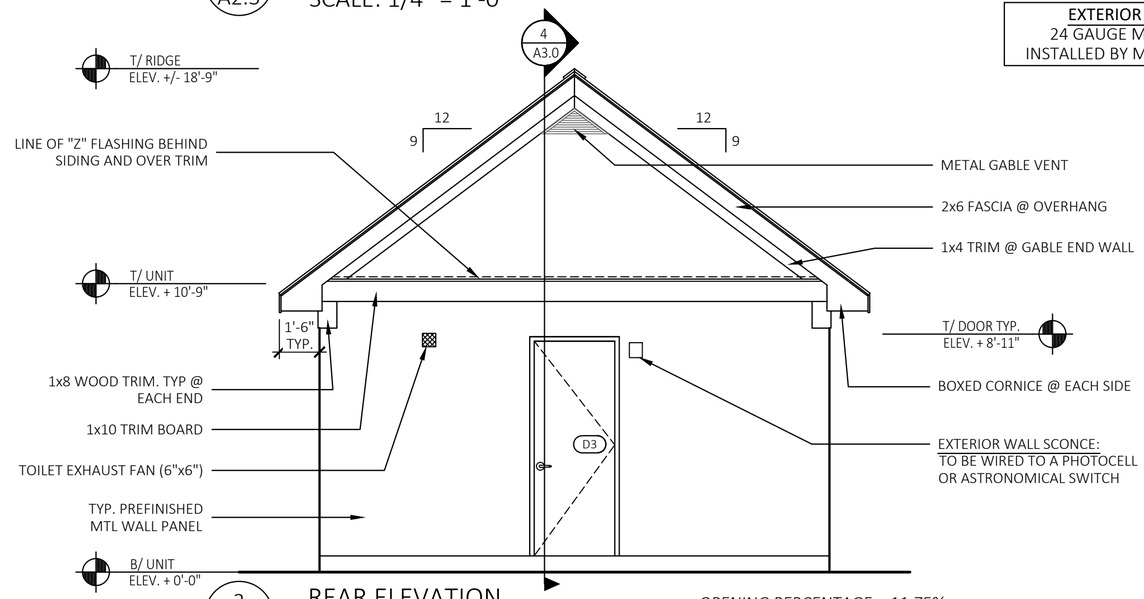

3 A2.3 REAR ELEVATION

SCALE: 1/4" = 1'-0"

OPENING PERCENTAGE = 11.75%

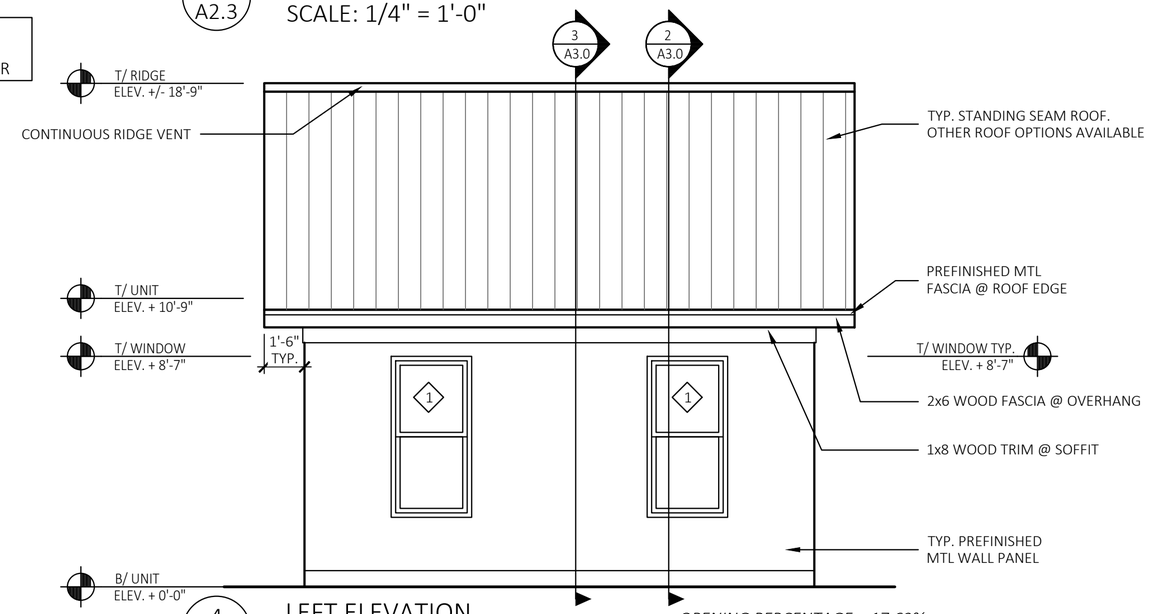

4 A2.3 LEFT ELEVATION

SCALE: 1/4" = 1'-0"

OPENING PERCENTAGE = 17.62%

MAXIMUM AREA OF EXT. WALL OPENINGS AND FIRE SEPARATION DISTANCE / DEGREE OF OPENING PROTECTION

BASED OFF IRC TABLE R302.1 (1) EXT. WALLS

FIRE SEPARATION DISTANCE (FEET)	DEGREE OF OPENING PROTECTION	ALLOWABLE AREA
0 TO LESS THAN 3	UNPROTECTED, NONSPRINKLERED	NOT PERMITTED
3 TO LESS THAN 5	UNPROTECTED, NONSPRINKLERED	NOT PERMITTED
5 TO LESS THAN 10	UNPROTECTED, NONSPRINKLERED	10%
10 TO LESS THAN 15	UNPROTECTED, NONSPRINKLERED	15%
15 TO LESS THAN 20	UNPROTECTED, NONSPRINKLERED	25%

GABLE ROOF 9:12 SLOPE
151.5 PSF SNOW LOADS

THESE ARE TRUSS CAPACITIES ONLY...ALLOWABLE ROOF SNOW LOADS BASED ON WALL STRENGTH ARE OFTEN LESS, DEPENDING ON WIND AND SEISMIC CONDITIONS. GROUND SNOW LOADS ARE ABOUT 43% HIGHER. SEE S1.1, S1.2 AND S1.3

NOTE:
ALL INTAKES, GRILLES, + LOUVERS TO BE PROTECTED W/CORROSION RESISTANT SCREENS NOT LESS THAN 1/4" & NOT MORE THAN 1/2" IN SIZE

NOTE:
FIELD INSTALL WEATHER BARRIER FLASHING TAPE TO ALL PANEL SEAMS. REFER TO MANUFACTURER'S INSTALLATION MANUAL FOR DETAILS AND RECOMMENDATIONS

GENERAL EXTERIOR WALL SIDING NOTES (REFER TO A3.1 + A3.2 FOR CLADDING DETAILS):

CEMENT PLASTER (MAX. WT = 6 PSF) OR CEMENT FIBER PANELS (HARDIE, LP, OR SIMILAR) ARE ACCEPTABLE OPTIONS.

FOR CEMENT PLASTER: ATTACHED LATH OVER PAPER BACKING TO WALL WITH WAFER HEAD STYLE #10 SELF-PIERCING SHEET METAL SCREWS AT 9" OC EA WAY.

ATTACHMENT FOR CEMENT FIBER PANELS: WAFER HEAD STYLE #10 SELF-PIERCING SHEET METAL SCREWS AT 9" O.C. EA WAY.

FASTENERS IN BOTH CASES SHOULD BE CORROSION RESISTANT, GALVANIZED, OR STAINLESS STEEL. STAINLESS STEEL IS PARTICULARLY IMPORTANT FOR LOCATIONS NEAR THE OCEAN, LARGE LAKE, OR IN VERY HUMID CLIMATES.

CEMENT PLASTER AND CEMENT FIBER PANELS TO BE INSTALLED PER THE MANUFACTURER'S INSTALLATION PROCEDURES. CLADDING DETAILS ARE SHOWN ON THE SITE-SPECIFIC ARCHITECTURAL DRAWINGS.

DATE:	REV:	DESCRIPTION:

BOXABL INC.

5345 EAST NORTH BELT ROAD
NORTH LAS VEGAS, NV 89115, USA

+1(702) 500-9000 HELLO@BOXABL.COM

MODEL: 2 DOOR CASITA
BXB-000009

SHEET: A2.3 EXTERIOR ELEVATIONS - GABLE ROOF

BOXABL

SHED ROOF: CAN BE ROTATED IN ANY DIRECTION

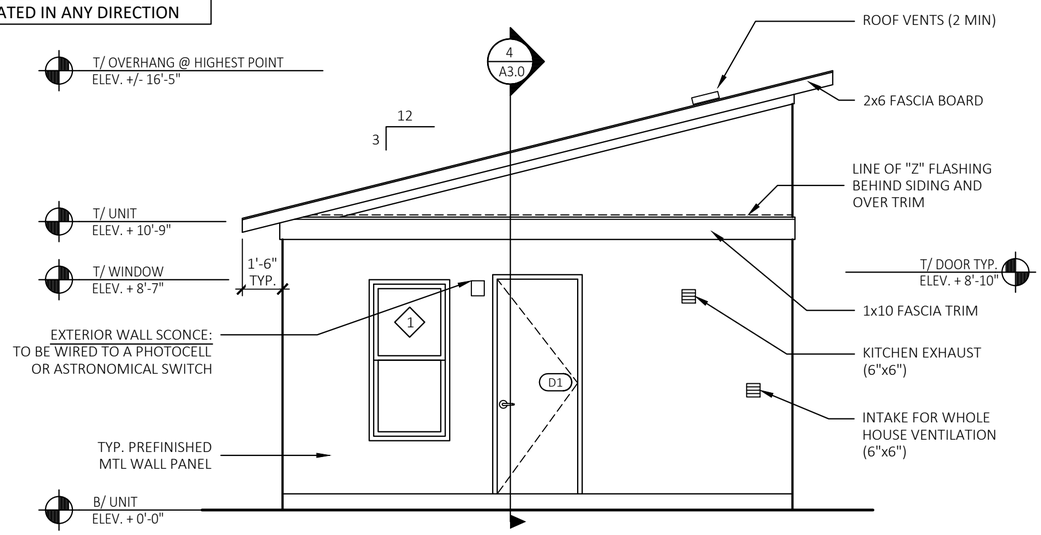

1 A2.4 FRONT ELEVATION *OPENING PERCENTAGE = 20.56%*
SCALE: 1/4" = 1'-0"

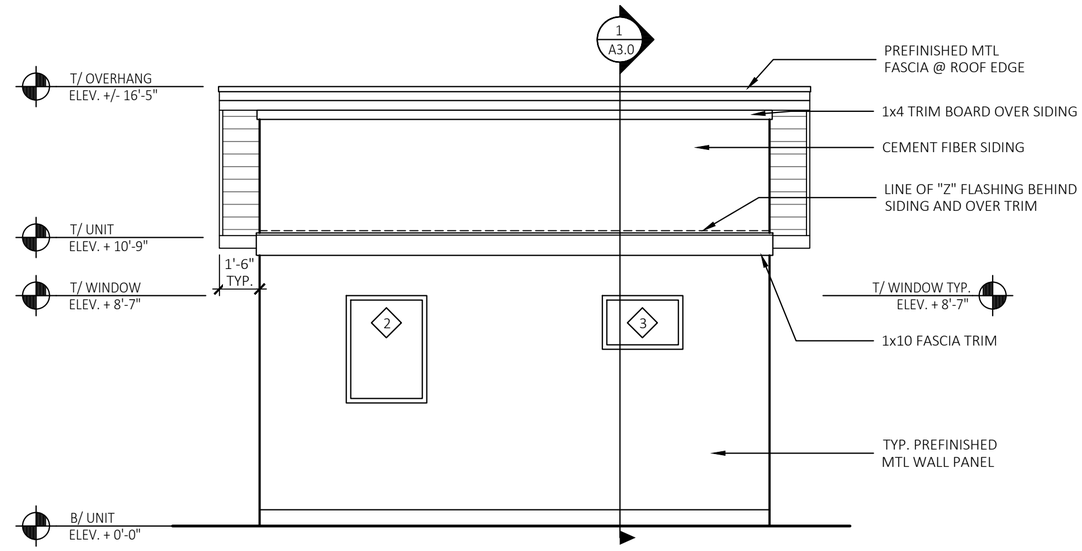

2 A2.4 RIGHT ELEVATION *OPENING PERCENTAGE = 8.81%*
SCALE: 1/4" = 1'-0"

EXTERIOR FINISHES:
24 GAUGE METAL PANEL
INSTALLED BY MANUFACTURER

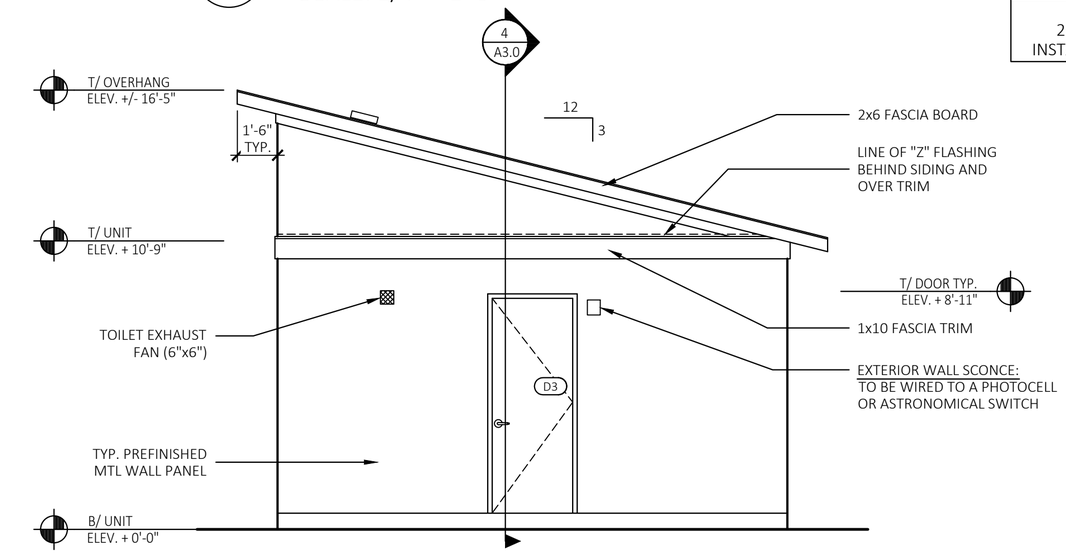

3 A2.4 REAR ELEVATION *OPENING PERCENTAGE = 11.75%*
SCALE: 1/4" = 1'-0"

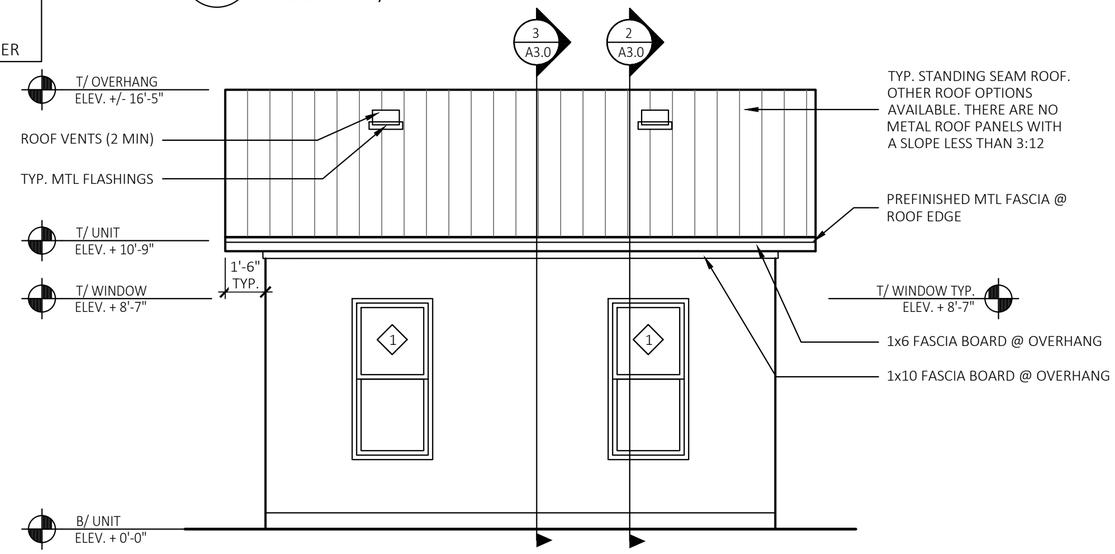

4 A2.4 LEFT ELEVATION *OPENING PERCENTAGE = 17.62%*
SCALE: 1/4" = 1'-0"

MAXIMUM AREA OF EXT. WALL OPENINGS AND FIRE SEPARATION DISTANCE / DEGREE OF OPENING PROTECTION

BASED OFF IRC TABLE R302.1 (1) EXT. WALLS

FIRE SEPARATION DISTANCE (FEET)	DEGREE OF OPENING PROTECTION	ALLOWABLE AREA
0 TO LESS THAN 3	UNPROTECTED, NONSPRINKLERED	NOT PERMITTED
3 TO LESS THAN 5	UNPROTECTED, NONSPRINKLERED	NOT PERMITTED
5 TO LESS THAN 10	UNPROTECTED, NONSPRINKLERED	10%
10 TO LESS THAN 15	UNPROTECTED, NONSPRINKLERED	15%
15 TO LESS THAN 20	UNPROTECTED, NONSPRINKLERED	25%

SHED ROOF 3:12 SLOPE
46.7 & 70 PSF SNOW LOADS.

THESE ARE TRUSS CAPACITIES ONLY...ALLOWABLE ROOF SNOW LOADS BASED ON WALL STRENGTH ARE OFTEN LESS, DEPENDING ON WIND AND SEISMIC CONDITIONS. GROUND SNOW LOADS ARE ABOUT 43% HIGHER. SEE S1.1, S1.2 AND S1.3

NOTE:
ALL INTAKES, GRILLES, + LOUVERS TO BE PROTECTED W/CORROSION RESISTANT SCREENS NOT LESS THAN 1/4" & NOT MORE THAN 1/2" IN SIZE

NOTE:
FIELD INSTALL WEATHER BARRIER FLASHING TAPE TO ALL PANEL SEAMS. REFER TO MANUFACTURER'S INSTALLATION MANUAL FOR DETAILS AND RECOMMENDATIONS

GENERAL EXTERIOR WALL SIDING NOTES (REFER TO A3.1 + A3.2 FOR CLADDING DETAILS):
CEMENT PLASTER (MAX. WT = 6 PSF) OR CEMENT FIBER PANELS (HARDIE, LP, OR SIMILAR) ARE ACCEPTABLE OPTIONS.

FOR CEMENT PLASTER: ATTACHED LATH OVER PAPER BACKING TO WALL WITH WAFER HEAD STYLE #10 SELF-PIERCING SHEET METAL SCREWS AT 9" OC EA WAY.

ATTACHMENT FOR CEMENT FIBER PANELS: WAFER HEAD STYLE #10 SELF-PIERCING SHEET METAL SCREWS AT 9" O.C. EA WAY.

FASTENERS IN BOTH CASES SHOULD BE CORROSION RESISTANT, GALVANIZED, OR STAINLESS STEEL. STAINLESS STEEL IS PARTICULARLY IMPORTANT FOR LOCATIONS NEAR THE OCEAN, LARGE LAKE, OR IN VERY HUMID CLIMATES.

CEMENT PLASTER AND CEMENT FIBER PANELS TO BE INSTALLED PER THE MANUFACTURER'S INSTALLATION PROCEDURES. CLADDING DETAILS ARE SHOWN ON THE SITE-SPECIFIC ARCHITECTURAL DRAWINGS.

DATE:	REV:	DESCRIPTION:

BOXABL INC.

5345 EAST NORTH BELT ROAD
NORTH LAS VEGAS, NV 89115, USA

+1(702) 500-9000 HELLO@BOXABL.COM

MODEL: 2 DOOR CASITA
BXB-000009

SHEET: A2.4 EXTERIOR ELEVATIONS - SHED (MONOSLOPE) ROOF

BOXABL

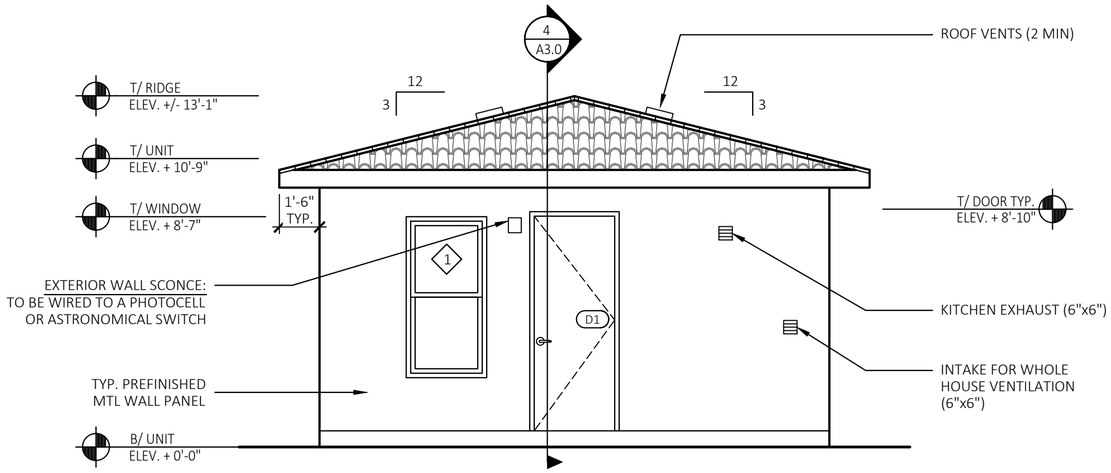

1 A2.5 FRONT ELEVATION

SCALE: 1/4" = 1'-0"

OPENING PERCENTAGE = 20.56%

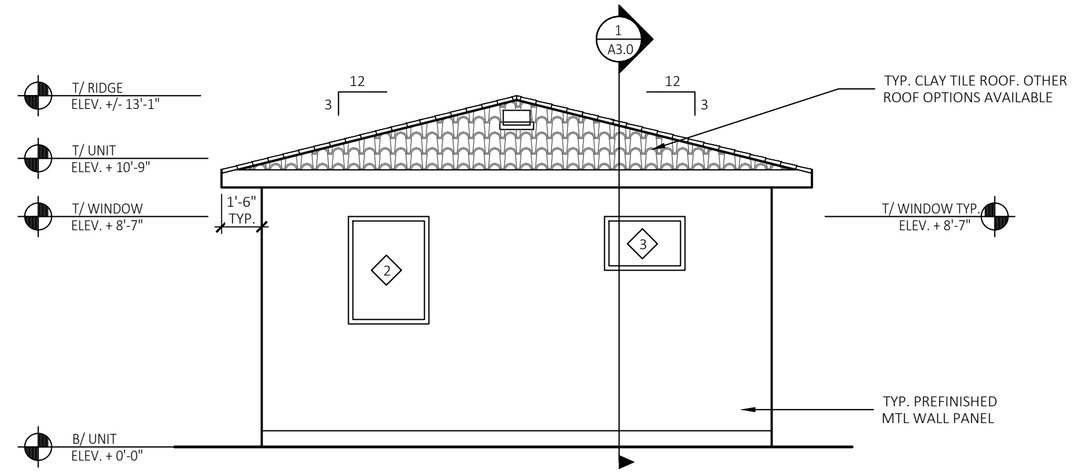

2 A2.5 RIGHT ELEVATION

SCALE: 1/4" = 1'-0"

OPENING PERCENTAGE = 8.81%

EXTERIOR FINISHES:
24 GAUGE METAL PANEL
INSTALLED BY MANUFACTURER

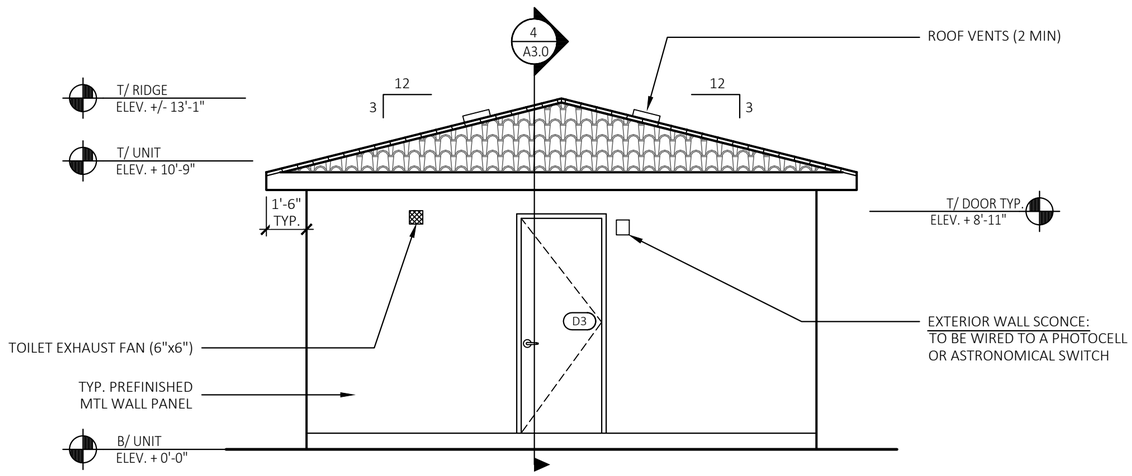

3 A2.5 REAR ELEVATION

SCALE: 1/4" = 1'-0"

OPENING PERCENTAGE = 11.75%

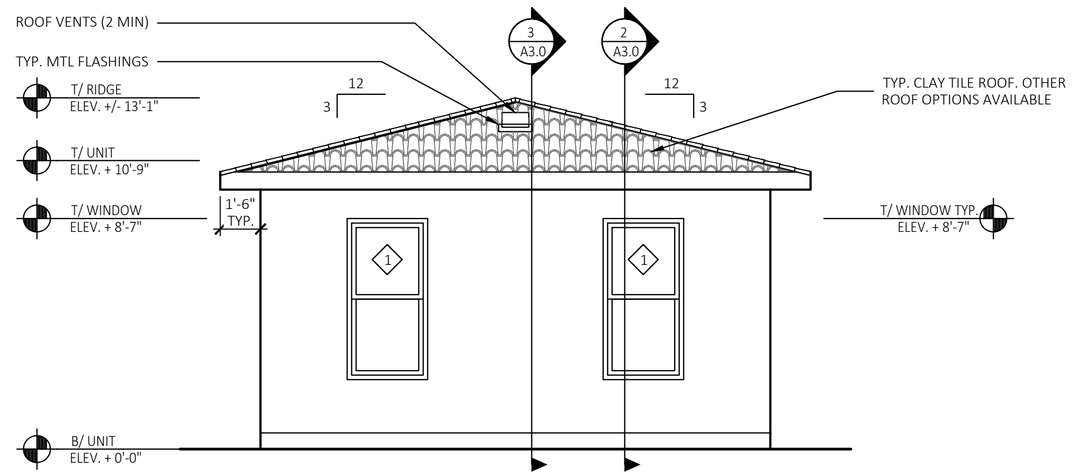

4 A2.5 LEFT ELEVATION

SCALE: 1/4" = 1'-0"

OPENING PERCENTAGE = 17.62%

MAXIMUM AREA OF EXT. WALL OPENINGS AND FIRE SEPARATION DISTANCE / DEGREE OF OPENING PROTECTION

BASED OFF IRC TABLE R302.1 (1) EXT. WALLS

FIRE SEPARATION DISTANCE (FEET)	DEGREE OF OPENING PROTECTION	ALLOWABLE AREA
0 TO LESS THAN 3	UNPROTECTED, NONSPRINKLERED	NOT PERMITTED
3 TO LESS THAN 5	UNPROTECTED, NONSPRINKLERED	NOT PERMITTED
5 TO LESS THAN 10	UNPROTECTED, NONSPRINKLERED	10%
10 TO LESS THAN 15	UNPROTECTED, NONSPRINKLERED	15%
15 TO LESS THAN 20	UNPROTECTED, NONSPRINKLERED	25%

HIP ROOF 3:12 SLOPE
46.7 PSF SNOW LOADS

THESE ARE TRUSS CAPACITIES ONLY...ALLOWABLE ROOF SNOW LOADS BASED ON WALL STRENGTH ARE OFTEN LESS, DEPENDING ON WIND AND SEISMIC CONDITIONS. GROUND SNOW LOADS ARE ABOUT 43% HIGHER. SEE S1.1, S1.2 AND S1.3

NOTE:
ALL INTAKES, GRILLES, + LOUVERS TO BE PROTECTED W/CORROSION RESISTANT SCREENS NOT LESS THAN 1/4" & NOT MORE THAN 1/2" IN SIZE

NOTE:
FIELD INSTALL WEATHER BARRIER FLASHING TAPE TO ALL PANEL SEAMS. REFER TO MANUFACTURER'S INSTALLATION MANUAL FOR DETAILS AND RECOMMENDATIONS

GENERAL EXTERIOR WALL SIDING NOTES (REFER TO A3.1 + A3.2 FOR CLADDING DETAILS):

CEMENT PLASTER (MAX. WT = 6 PSF) OR CEMENT FIBER PANELS (HARDIE, LP, OR SIMILAR) ARE ACCEPTABLE OPTIONS.

FOR CEMENT PLASTER: ATTACHED LATH OVER PAPER BACKING TO WALL WITH WAFER HEAD STYLE #10 SELF-PIERCING SHEET METAL SCREWS AT 9" OC EA WAY.

ATTACHMENT FOR CEMENT FIBER PANELS: WAFER HEAD STYLE #10 SELF-PIERCING SHEET METAL SCREWS AT 9" O.C. EA WAY.

FASTENERS IN BOTH CASES SHOULD BE CORROSION RESISTANT, GALVANIZED, OR STAINLESS STEEL. STAINLESS STEEL IS PARTICULARLY IMPORTANT FOR LOCATIONS NEAR THE OCEAN, LARGE LAKE, OR IN VERY HUMID CLIMATES.

CEMENT PLASTER AND CEMENT FIBER PANELS TO BE INSTALLED PER THE MANUFACTURER'S INSTALLATION PROCEDURES. CLADDING DETAILS ARE SHOWN ON THE SITE-SPECIFIC ARCHITECTURAL DRAWINGS.

DATE:	REV:	DESCRIPTION:

BOXABL INC.

5345 EAST NORTH BELT ROAD
NORTH LAS VEGAS, NV 89115, USA

+1(702) 500-9000 HELLO@BOXABL.COM

MODEL: 2 DOOR CASITA
BXB-000009

SHEET: A2.5 EXTERIOR ELEVATIONS - HIP ROOF

BOXABL

PARAPET ROOF: CAN BE ROTATED IN ANY DIRECTION

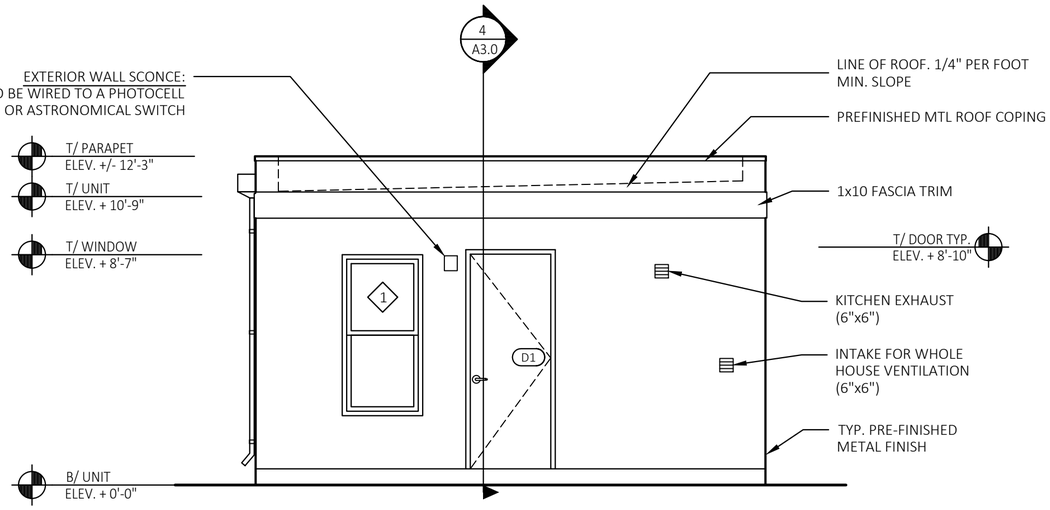

1 A2.6 FRONT ELEVATION

SCALE: 1/4" = 1'-0"

OPENING PERCENTAGE = 20.56%

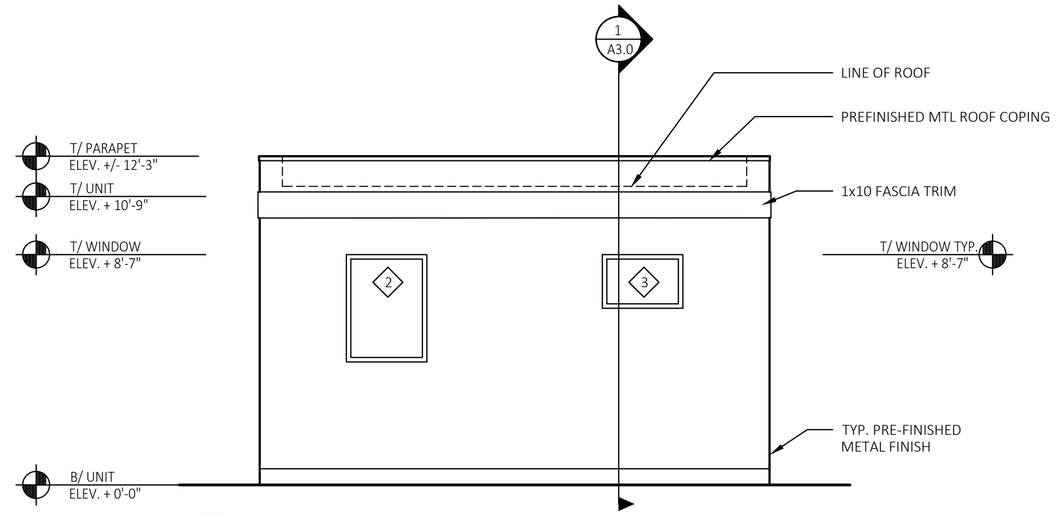

2 A2.6 RIGHT ELEVATION

SCALE: 1/4" = 1'-0"

OPENING PERCENTAGE = 8.81%

EXTERIOR FINISHES:
24 GAUGE METAL PANEL
INSTALLED BY MANUFACTURER

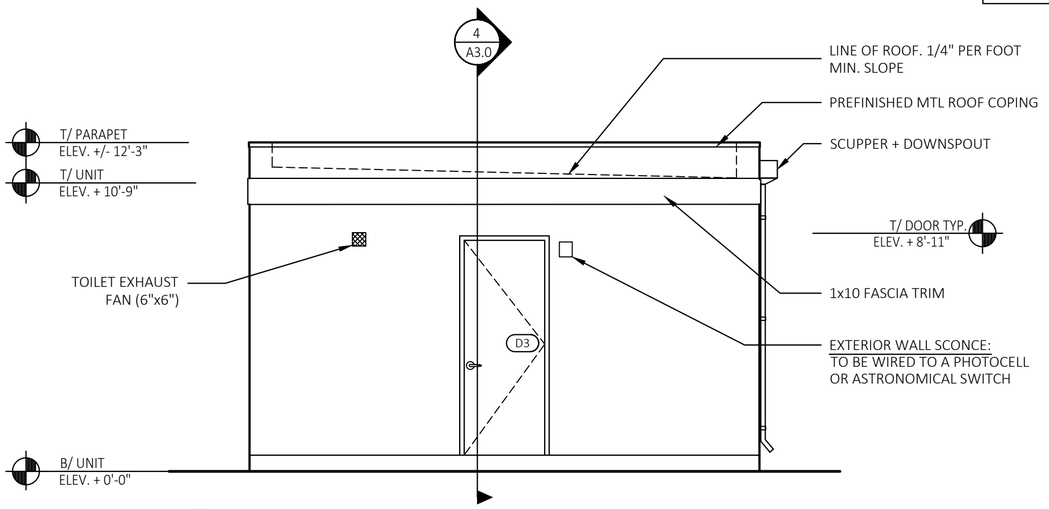

3 A2.6 REAR ELEVATION

SCALE: 1/4" = 1'-0"

OPENING PERCENTAGE = 11.75%

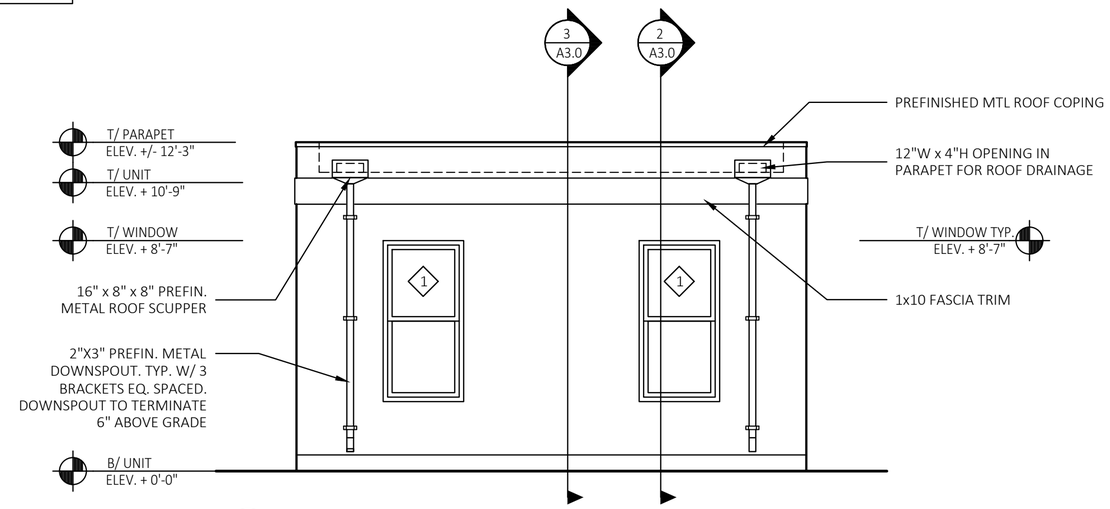

4 A2.6 LEFT ELEVATION

SCALE: 1/4" = 1'-0"

OPENING PERCENTAGE = 17.62%

MAXIMUM AREA OF EXT. WALL OPENINGS AND FIRE SEPARATION DISTANCE / DEGREE OF OPENING PROTECTION		
BASED OFF IRC TABLE R302.1 (1) EXT. WALLS		
FIRE SEPARATION DISTANCE (FEET)	DEGREE OF OPENING PROTECTION	ALLOWABLE AREA
0 TO LESS THAN 3	UNPROTECTED, NONSPRINKLERED	NOT PERMITTED
3 TO LESS THAN 5	UNPROTECTED, NONSPRINKLERED	NOT PERMITTED
5 TO LESS THAN 10	UNPROTECTED, NONSPRINKLERED	10%
10 TO LESS THAN 15	UNPROTECTED, NONSPRINKLERED	15%
15 TO LESS THAN 20	UNPROTECTED, NONSPRINKLERED	25%

NOTE:
ALL INTAKES, GRILLES, + LOUVERS TO BE PROTECTED W/CORROSION RESISTANT SCREENS NOT LESS THAN 1/4" & NOT MORE THAN 1/2" IN SIZE

NOTE:
FIELD INSTALL WEATHER BARRIER FLASHING TAPE TO ALL PANEL SEAMS. REFER TO MANUFACTURER'S INSTALLATION MANUAL FOR DETAILS AND RECOMMENDATIONS

GENERAL EXTERIOR WALL SIDING NOTES (REFER TO A3.1 + A3.2 FOR CLADDING DETAILS):

CEMENT PLASTER (MAX. WT = 6 PSF) OR CEMENT FIBER PANELS (HARDIE, LP, OR SIMILAR) ARE ACCEPTABLE OPTIONS.

FOR CEMENT PLASTER: ATTACHED LATH OVER PAPER BACKING TO WALL WITH WAFER HEAD STYLE #10 SELF-PIERCING SHEET METAL SCREWS AT 9" OC EA WAY.

ATTACHMENT FOR CEMENT FIBER PANELS: WAFER HEAD STYLE #10 SELF-PIERCING SHEET METAL SCREWS AT 9" O.C. EA WAY.

FASTENERS IN BOTH CASES SHOULD BE CORROSION RESISTANT, GALVANIZED, OR STAINLESS STEEL. STAINLESS STEEL IS PARTICULARLY IMPORTANT FOR LOCATIONS NEAR THE OCEAN, LARGE LAKE, OR IN VERY HUMID CLIMATES.

CEMENT PLASTER AND CEMENT FIBER PANELS TO BE INSTALLED PER THE MANUFACTURER'S INSTALLATION PROCEDURES. CLADDING DETAILS ARE SHOWN ON THE SITE-SPECIFIC ARCHITECTURAL DRAWINGS.

DATE:	REV:	DESCRIPTION:

BOXABL INC.

5345 EAST NORTH BELT ROAD
NORTH LAS VEGAS, NV 89115, USA

+1(702) 500-9000 HELLO@BOXABL.COM

MODEL: 2 DOOR CASITA
BXB-000009

SHEET: A2.6 EXTERIOR ELEVATIONS - PARAPET ROOF

BOXABL

TYPICAL ROOF COVERING (PITCHED ROOF) (CLIMATE ZONES 2-5):

SLOPED ROOF TRUSS KIT & ROOF COVERING (ASPHALT SHINGLES, CLAY TILES, ETC.) TO BE PURCHASED SEPARATELY BY THE UNIT OWNER. ROOFS TO BE INSTALLED + INSPECTED ON SITE.

TYPICAL ROOF COVERING (LOW SLOPE ROOF) (CLIMATE ZONES 2 + 3 ONLY):

GAF TPO FULLY ADHERED SINGLE PLY MEMBRANE OR APPROVED ADHERE EPDM ROOFING MEMBRANE WITH ALL REQUIRED FLASHINGS, AND ACCESSORIES AS NECESSARY FOR A COMPLETE AND WATERTIGHT INSTALLATION. BASE INSULATION: 2-1/2" TH @ ROOF EDGES, 5" TH @ CENTER (1/4: 12 SLOPE) (FOAM WEDGE ROOF) ROOFS TO BE INSTALLED + INSPECTED ON SITE.

STANDARD WALL CONSTRUCTION TYPES

TYPICAL STRUCTURAL INSULATED WALL PANEL
1/4" MGO BOARD ADHERED TO 5 3/4" EPS FOAM INSULATION W/ 24 GAUGE METAL PANEL AS OUTSIDE FINISH.

TYPICAL STRUCTURAL INSULATED ROOF PANEL
1/4" MGO BOARD ADHERED TO 6 3/4" EPS FOAM INSULATION W/ TPO ROOFING MEMBRANE AS OUTSIDE FINISH

TYPICAL STRUCTURAL INSULATED FLOOR PANEL
1/4" MGO BOARD ADHERED TO 6 3/4" EPS FOAM INSULATION W/ 24 GAUGE METAL PANEL AS OUTSIDE FINISH.

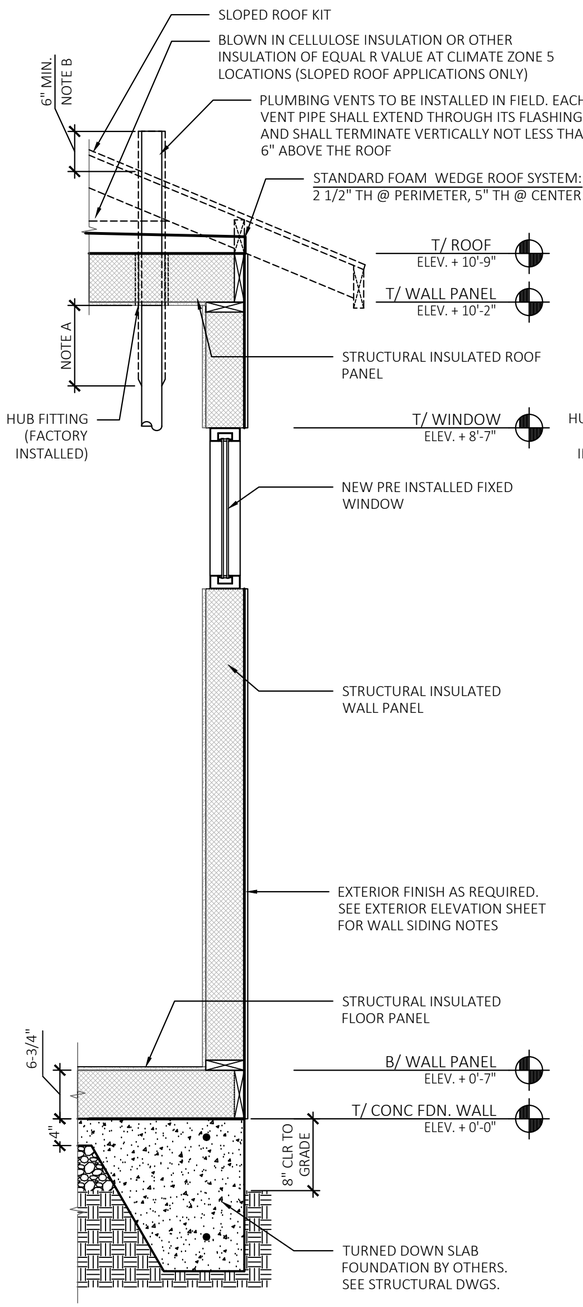

1 A3.0 WALL SECTION
SCALE: 3/4" = 1'-0"

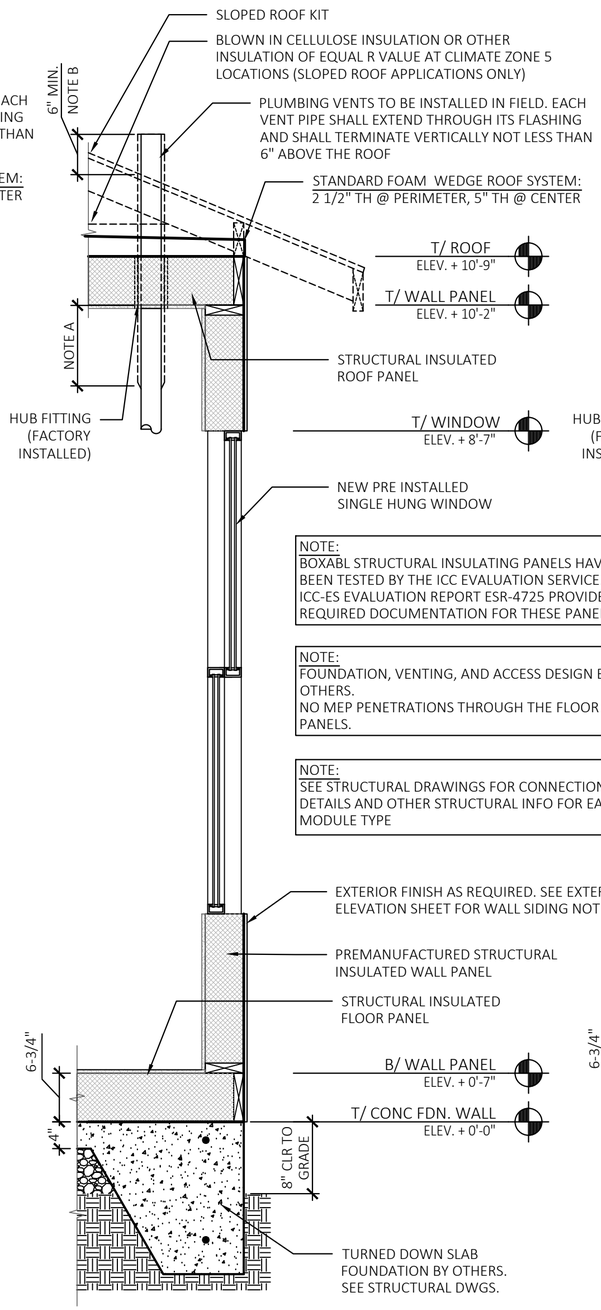

NOTE:
BOXABL STRUCTURAL INSULATING PANELS HAVE BEEN TESTED BY THE ICC EVALUATION SERVICE. ICC-ES EVALUATION REPORT ESR-4725 PROVIDES THE REQUIRED DOCUMENTATION FOR THESE PANELS

NOTE:
FOUNDATION, VENTING, AND ACCESS DESIGN BY OTHERS.
NO MEP PENETRATIONS THROUGH THE FLOOR PANELS.

NOTE:
SEE STRUCTURAL DRAWINGS FOR CONNECTIONS, DETAILS AND OTHER STRUCTURAL INFO FOR EACH MODULE TYPE

2 A3.0 WALL SECTION
SCALE: 3/4" = 1'-0"

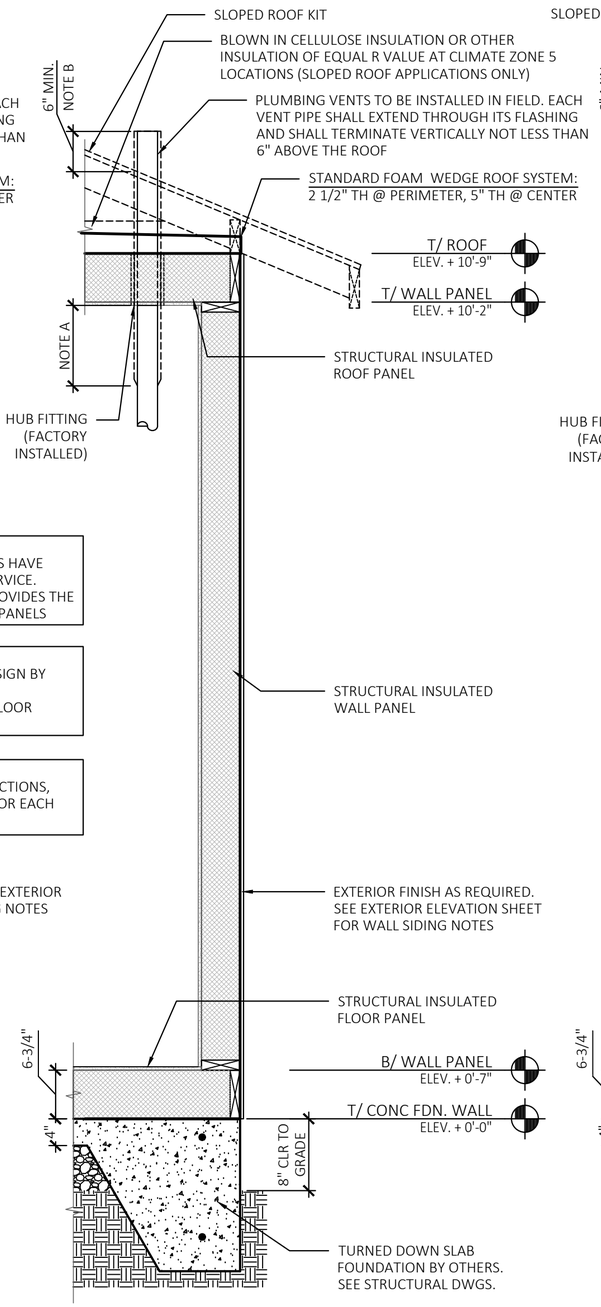

3 A3.0 WALL SECTION
SCALE: 3/4" = 1'-0"

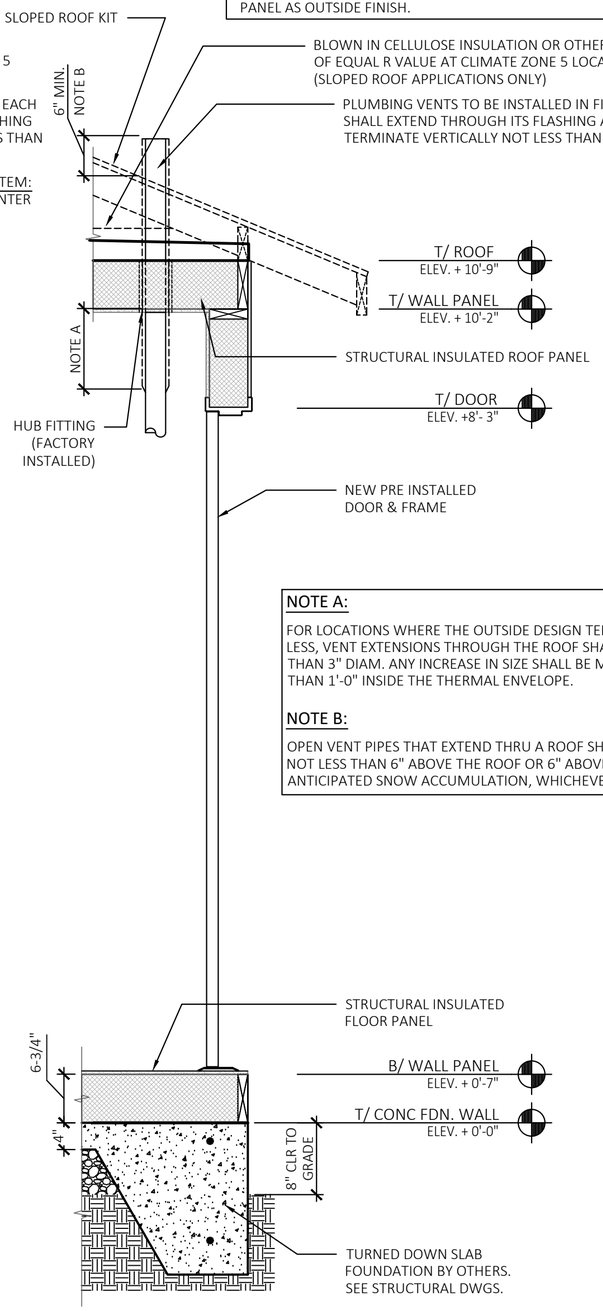

4 A3.0 WALL SECTION
SCALE: 3/4" = 1'-0"

NOTE A:

FOR LOCATIONS WHERE THE OUTSIDE DESIGN TEMP IS 0°F OR LESS, VENT EXTENSIONS THROUGH THE ROOF SHALL BE NOT LESS THAN 3" DIAM. ANY INCREASE IN SIZE SHALL BE MADE NOT LESS THAN 1'-0" INSIDE THE THERMAL ENVELOPE.

NOTE B:

OPEN VENT PIPES THAT EXTEND THRU A ROOF SHALL TERMINATE NOT LESS THAN 6" ABOVE THE ROOF OR 6" ABOVE THE ANTICIPATED SNOW ACCUMULATION, WHICHEVER IS GREATER.

DATE:	REV:	DESCRIPTION:

BOXABL INC.

5345 EAST NORTH BELT ROAD
NORTH LAS VEGAS, NV 89115, USA

+1(702) 500-9000 HELLO@BOXABL.COM

MODEL: 2 DOOR CASITA
BXB-000009

SHEET: A3.0 WALL SECTIONS

BOXABL

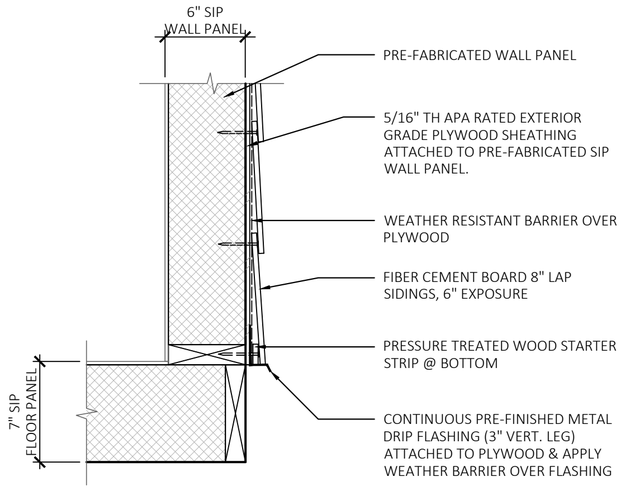

1 A3.1 SECTION @ BASE - LAP SIDING
SCALE: 1 1/2" = 1'-0"

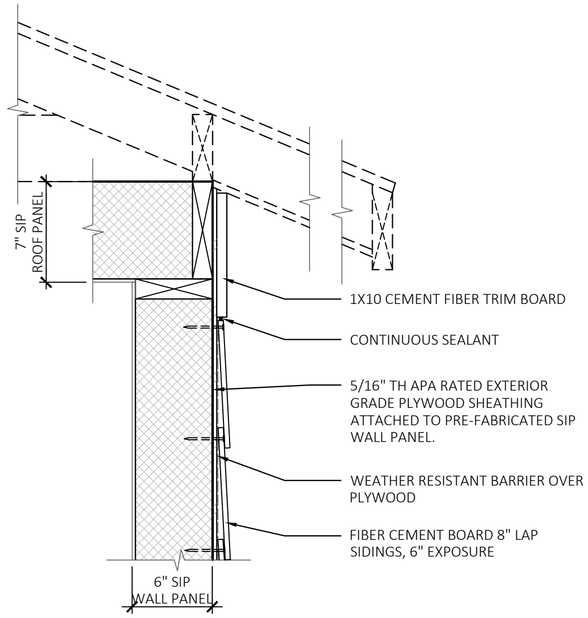

2 A3.1 SECTION @ ROOF - LAP SIDING
SCALE: 1 1/2" = 1'-0"

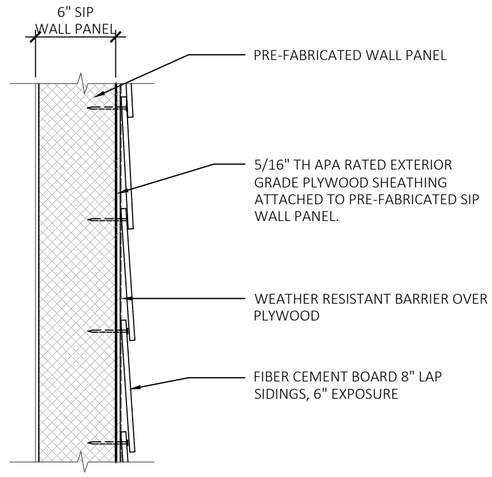

3 A3.1 SECTION THRU TYP WALL - LAP SIDING
SCALE: 1 1/2" = 1'-0"

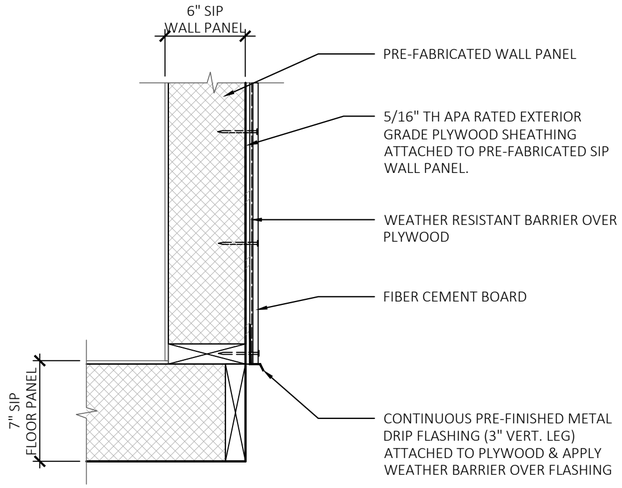

4 A3.1 SECTION @ BASE - PANELS
SCALE: 1 1/2" = 1'-0"

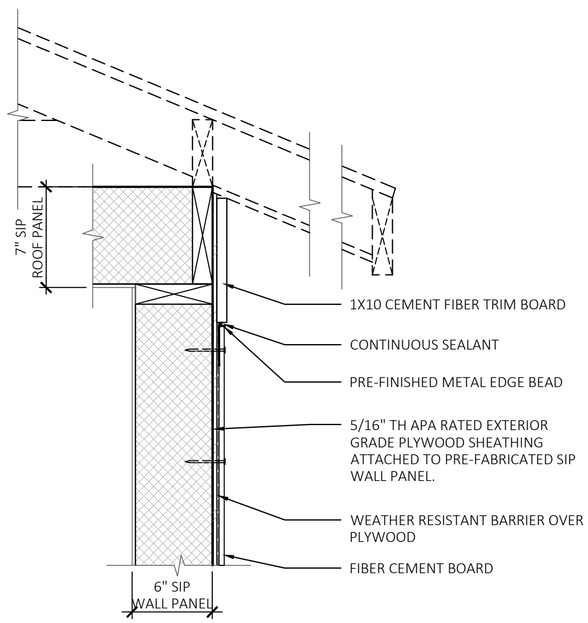

5 A3.1 SECTION @ ROOF - PANELS
SCALE: 1 1/2" = 1'-0"

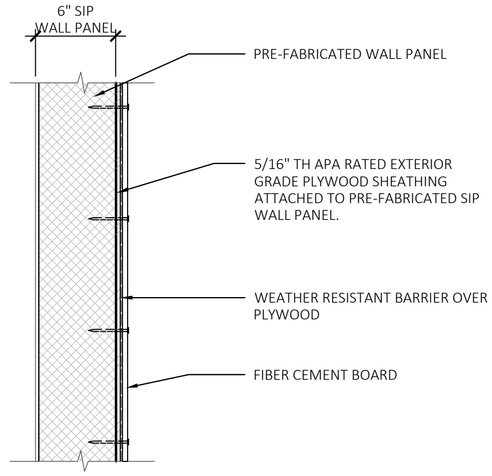

6 A3.1 SECTION THRU TYP WALL - PANELS
SCALE: 1 1/2" = 1'-0"

DATE:	REV:	DESCRIPTION:

BOXABL INC.

5345 EAST NORTH BELT ROAD
NORTH LAS VEGAS, NV 89115, USA

+1(702) 500-9000 HELLO@BOXABL.COM

MODEL: 2 DOOR CASITA
BXB-000009

SHEET: A3.1 GENERAL CLADDING DETAILS - LAP SIDING & PANEL SIDING

BOXABL

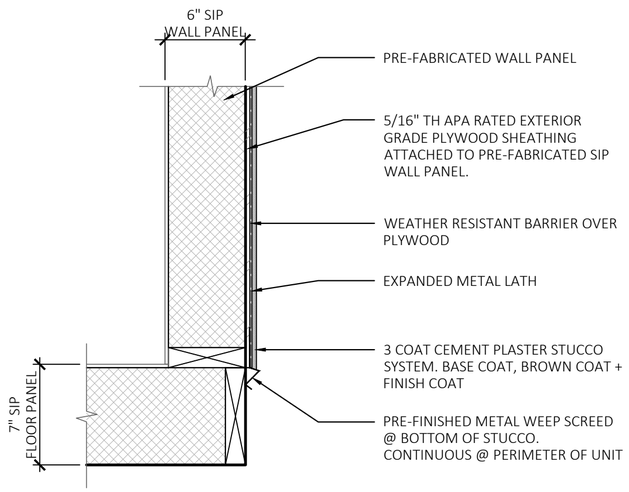

1 A3.2 SECTION @ BASE - STUCCO
SCALE: 1 1/2" = 1'-0"

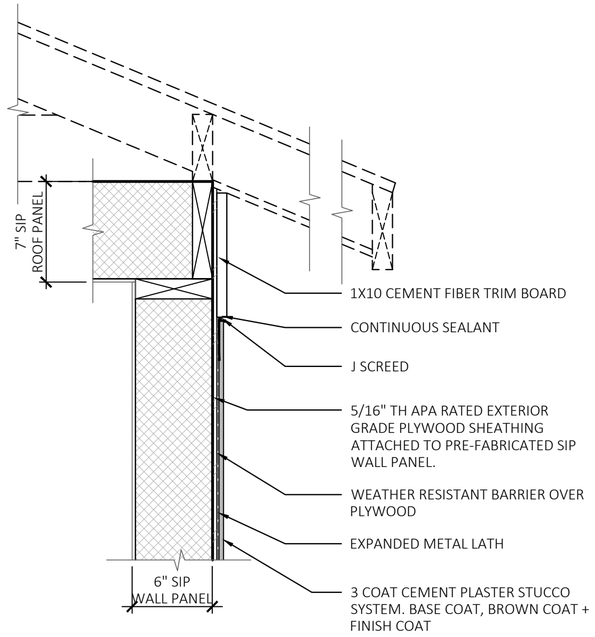

2 A3.2 SECTION @ ROOF - STUCCO
SCALE: 1 1/2" = 1'-0"

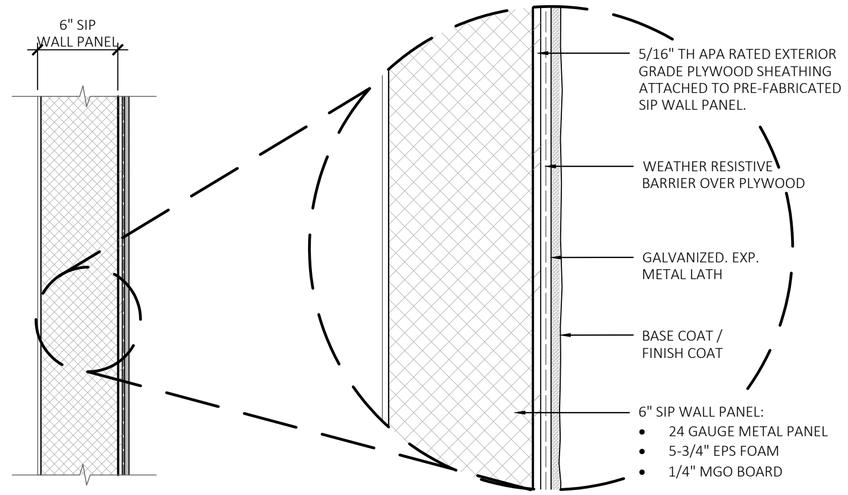

NOTE:
SECTION SHOWN EXAGGERATED FOR DETAILING CLARITY

3 A3.2 SECTION THRU TYP WALL - STUCCO
SCALE: 1 1/2" = 1'-0"

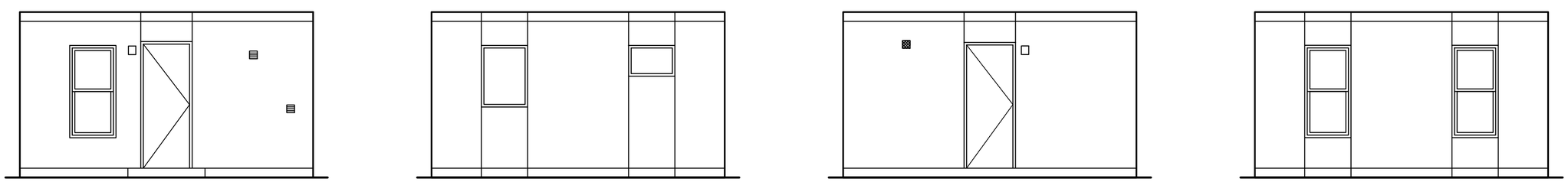

4 A3.2 CONTROL JOINT LOCATIONS
SCALE: 3/16" = 1'-0"

NOTE:
ELEVATIONS ARE PROVIDED FOR CONTROL JOINT LOCATIONS ONLY.
THESE ELEVATIONS DO NOT DEPICT ANY TYPE OF ROOF CONFIGURATION.

DATE:	REV:	DESCRIPTION:

BOXABL INC.

5345 EAST NORTH BELT ROAD
NORTH LAS VEGAS, NV 89115, USA

+1(702) 500-9000 HELLO@BOXABL.COM

MODEL: 2 DOOR CASITA
BXB-000009

SHEET: A3.2 GENERAL CLADDING DETAILS - STUCCO

BOXABL

GENERAL

1. ALL WORK SHALL BE IN ACCORDANCE WITH ALL AUTHORITIES HAVING JURISDICTION AND SUBJECT TO INSPECTION.

2. HOOK-UP CHARGES, PERMITS AND ALL OTHER EXPENSES RELATED TO A COMPLETE AND FUNCTIONING PLUMBING SYSTEM ARE INCLUDED AS PART OF THE PLUMBING WORK.

3. ALL AUTHORITIES HAVING JURISDICTION SHALL BE NOTIFIED AT LEAST THREE WORKING DAYS PRIOR TO COMMENCEMENT OF WORK.

4. THE WORK INCLUDED PROVIDING THE PLUMBING SYSTEM AND PROVIDING NEW MATERIALS, FITTINGS AND ACCESSORIES NECESSARY FOR A COMPLETE FUNCTIONING PLUMBING SYSTEM.

5. THE INTENT OF THE DRAWINGS IS TO INDICATE THE GENERAL EXTENT OF WORK REQUIRED FOR THE PROJECT. THE DRAWINGS FOR PLUMBING WORK ARE DIAGRAMMATIC, SHOWING THE GENERAL LOCATION, TYPE, FIXTURE AND EQUIPMENT REQUIRED. THE DRAWINGS SHALL NOT BE SCALED FOR EXACT MEASUREMENTS. REFER TO MANUFACTURER'S STANDARD ROUGH-IN DRAWINGS FOR PLUMBING FIXTURES FOR EXACT LOCATIONS.

BASIC MATERIALS AND METHODS

1. MATERIALS SHALL BEAR UNDERWRITER LABEL WHERE SUCH STANDARDS HAVE BEEN ESTABLISHED AND LISTED BY UNDERWRITER LABORATORIES, INC. MATERIALS, EQUIPMENT AND APPLIANCES SHALL CONFORM TO THE LATEST STANDARDS OF:
   ANSI -AMERICAN NATIONAL STANDARDS INSTITUTE
   ASHRAE -AMERICAN SOCIETY OF HEATING, REFRIGERATION AND AIR CONDITIONING ENGINEERS
   ASME -AMERICAN SOCIETY OF MECHANICAL ENGINEERS
   ASTM -AMERICAN SOCIETY FOR TESTING ENGINEERS
   NEMA NATIONAL ELECTRICAL MANUFACTURER'S ASSOCIATION

COORDINATION

1. COORDINATE WITH THE WORK OF OTHER TRADES.

2. REFER TO ARCHITECTURAL DRAWINGS OR CONSULT ARCHITECT FOR EXACT LOCATION OF FIXTURES, EQUIPMENT, ETC., AND FINAL FINISHED ELEVATIONS PRIOR TO ANY INSTALLATION WORK.

3. COORDINATE WITH GENERAL CONTRACTOR WHO SHALL CONSULT WITH THE OWNER FOR ALLOWABLE DAYS THAT WORK CAN BE PERFORMED AND TO SCHEDULE SYSTEM SHUT DOWNS AS REQUIRED FOR RELOCATION OF RISERS, ETC.

INSTALLATION - GENERAL

1. LISTED AND APPROVED THROUGH PENETRATION SYSTEM SHALL BE USED ON ALL PLUMBING PENETRATIONS OF FIRE RATED ASSEMBLIES.

2. EXPOSED PIPING IN FINISHED AREA SHALL BE WITH CHROME PLATED ESCUTCHEON AT PIPE ENTRY TO FINISHED AREA.

3. ALL PIPING SHALL BE CONCEALED IN CABINETS AND FIXED FURNISHINGS UNLESS OTHERWISE INDICATED.

4. CUT AND PATCH EXISTING FLOOR, WALL OR CEILING CONSTRUCTION AS REQUIRED FOR THE INSTALLATION WORK.

5. SLEEVE OR CORE-DRILL FLOOR SLABS, WALLS, ETC. AS REQUIRED FOR PIPING AND FIRE STOP OPENING AROUND PIPE. VERIFY LOCATION OF STRUCTURAL BEAMS, JOIST, ETC. BEFORE DRILLING.

6. WHEREVER FOUNDATION WALLS, OUTSIDE WALLS, ROOF, ETC. ARE PENETRATED FOR INSTALLATION OF SYSTEMS, THEY SHALL BE PATCHED TO MATCH EXISTING CONSTRUCTION AND SEALED WEATHER TIGHT. WORK SHALL BE PERFORMED BY CRAFTSMAN SKILLED IN THEIR RESPECTIVE TRADES.

7. ALL PIPING SHALL BE RUN PARALLEL TO BUILDING LINES AND SUPPORTED AND ANCHORED AS REQUIRED TO FACILITATE EXPANSION AND CONTRACTION. ALL PIPING SHALL BE CONCEALED EXCEPT IN UNFINISHED SPACES. INSTALL AS REQUIRED TO MEET ALL CONSTRUCTION CONDITIONS AND TO ALLOW FOR INSTALLATION OF OTHER WORK INCLUDING DUCTS AND ELECTRICAL CONDUIT. AT ALL CONNECTIONS BETWEEN FERROUS PIPING AND NONFERROUS PIPING, PROVIDE AN ISOLATING DIELECTRIC UNION.

8. PROVIDE ALL FITTINGS, ACCESSORIES, OFFSETS AND MATERIALS NECESSARY TO FACILITATE THE PLUMBING SYSTEMS FUNCTIONING AS INDICATED BY THE DESIGN AND THE EQUIPMENT INDICATED.

9. PIPING ROUTED IN EXTERIOR WALLS SHALL BE ROUTED ON THE INTERIOR SIDE OF BUILDING WALL INSULATION.

10. ACCESS PANELS SHALL BE PROVIDED WHERE CONCEALED CONTROL DEVICES, VALVES, CLEANOUTS, ETC. ARE CONCEALED WITHIN CEILINGS AND WALLS. WHERE ACCESS FOR ADJUSTMENT AND MAINTENANCE IS POSSIBLE THRU LAY-IN SUSPENDED CEILINGS, ACCESS PANELS ARE NOT REQUIRED.

11. THOROUGHLY CLEAN ITEMS BEFORE INSTALLATION, CAP PIPE OPENINGS TO EXCLUDE DIRT UNTIL FIXTURES ARE INSTALLED AND FINAL CONNECTIONS HAVE BEEN MADE. SET FIXTURES LEVEL AND IN PROPER ALIGNMENT. INSTALL SUPPLIES IN PROPER ALIGNMENT WITH FIXTURES. INSTALL SILICONE SEALANT BETWEEN FIXTURES AND ADJACENT MATERIAL FOR SANITARY JOINT.

DOMESTIC WATER PIPING

1. PROVIDE PRESSURE REDUCING VALVE ON PLUMBING SYSTEMS WHERE THE INCOMING WATER SERVICE PRESSURE IS IN EXCESS OF 80 PSI.

2. HOT AND COLD WATER PIPING SHALL BE PEX TUBING. PROVIDE WATER HAMMER ARRESTORS PER DRAWINGS.

3. PROVIDE ISOLATION VALVES FOR EACH BRANCH OFF MAIN SUPPLY.

4. SHUT-OFF VALVES WITH UNIONS SHALL BE PROVIDED FOR SERVICE TO EACH PLUMBING FIXTURE OR OTHER EQUIPMENT ITEM TO FACILITATE ISOLATION FOR REPAIR OR REPLACEMENT.

5. VALVE LOCATION TAGS REQUIRED ON ALL SHUT-OFFS AND LOCATION CHART REQUIRED.

6. THE DOMESTIC WATER SYSTEM SHALL BE FLUSHED, PRESSURE TESTED AND PURIFIED. TEST WATER UNDER 80-100 PSIG HYDROSTATIC PRESSURE FOR 15 MINUTES MINIMUM. WHEN TESTING INDICATES MATERIALS OR WORKMANSHIP IS DEFICIENT, REPLACE OR REPAIR AS REQUIRED, AND REPEAT UNTIL STANDARDS ARE ACHIEVED. ALL PIPING SYSTEMS SHALL BE SUBJECTED TO A DISINFECTION PROCEDURE PER THE RULES AND REGULATIONS OF THE LOCAL AUTHORITIES.

7. HOT WATER PIPING SHALL BE INSULATED AND HAVE A MINIMUM WALL THICKNESS OF NOT LESS THAN THE DIMETER OF THE PIPE PER 2022 CPC 609.12.2.

SANITARY SEWER, STORM SEWER, AND VENT PIPING

1. ALL OPENINGS IN DRAINAGE AND/OR VENT SYSTEMS AS A RESULT OF DEMOLITION OR INSTALLATION ROUGH-IN SHALL BE PROTECTED WITH A TEST PLUG THAT IS SECURELY LOCKED IN PLACE UNTIL FINAL FINISHED CONNECTIONS ARE INSTALLED.

2. PROVIDE PVC VENT PIPING THRU ROOF PER DETAILS ON ARCHITECTURAL SHEETS.

3. CONDENSATE AND INDIRECT DRAIN PIPING SHALL BE TYPE PVC OR CLEAR VINYL TUBING UP TO 1" ID.

4. DRAINAGE PIPING UNDERGROUND AND OUTSIDE THE BUILDING SHALL BE PVC PIPE AND FITTINGS. (ALTERNATE MATERIALS MAY BE ALLOWED IF APPROVED BY LOCAL CODE AUTHORITIES.)

5. DRAINAGE PIPING INSIDE THE BUILDING SHALL BE PVC PIPE AND FITTINGS WITH SCHEDULE 40 PVC VENTS TO A VENT THRU ROOF.

6. PROVIDE CLEANOUTS AT THE END OF EACH HORIZONTAL RUN, AND AT THE BASE OF ALL VERTICAL WASTE AND DRAIN PIPES. CLEANOUTS SHALL BE OF THE SAME SIZE AS THE PIPES THEY SERVE. FIELD VERIFY LOCATION OF ALL EXISTING CLEANOUTS AND ADJUST TO NEW FINISHED FLOOR ELEVATIONS AND PROVIDE ACCESS PANELS FOR ALL WALLS AND CEILINGS.

7. ALL DRAINAGE PIPING SHALL BE UNIFORMLY PITCHED, 1/4" PER FOOT UNLESS OTHERWISE REQUIRED BY EXISTING CONDITIONS, MINIMUM SLOPE SHALL BE PER CODE.

8. ALL FLOOR DRAINS SHALL BE CONNECTED TO THE SANITARY SEWER SYSTEM.

9. THE DRAINAGE SYSTEMS SHALL BE FLUSHED AND PRESSURE TESTED.

SUBSTITUTIONS

1. THE NAMING OF MANUFACTURER'S IN THE SPECIFICATIONS SHALL NOT BE CONSTRUED AS ELIMINATING THE MATERIALS, PRODUCTS OR SERVICES OF OTHER MANUFACTURER'S AND SUPPLIERS HAVING EQUIVALENT ITEMS. ANY SUBSTITUTED ITEMS MUST BE EQUAL TO THOSE SPECIFIED, PROVIDE COST SAVINGS AND BE AVAILABLE TO MEET THE CONSTRUCTION SCHEDULE.

PLUMBING SYMBOLS

— CWS —	COLD WATER SUPPLY PIPING
— HWS —	HOT WATER SUPPLY PIPING
— SAN —	SANITARY WASTE PIPING
– – – V – – –	SANITARY VENT PIPING
— – —	COLD WATER SUPPLY PIPING
— – – —	HOT WATER SUPPLY PIPING
– – – – – – –	SANITARY VENT PIPING
BFP	BACKFLOW PREVENTER
CO	CLEANOUT
CP	CHROME PLATED
DN	DOWN
DW	DISHWASHER
ET	EXPANSION TANK
FD	FLOOR DRAIN
GALV	GALVANIZED
INV. EL.	INVERT ELEVATION
IM	ICE MAKER
LAV	LAVATORY
NC	NEW CONNECTION
PRV	PRESSURE REDUCING VALVE
PSIG	POUNDS PER SQUARE INCH
S	SANITARY
SHR	SHOWER
SK	SINK
TMV	THERMOSTATIC MIXING VALVE
V	VENT
VTR	VENT THRU ROOF
W	WASTE
WC	WATER CLOSET
WH	WATER HEATER
	LINE SIZE BALL GATE VALVE
	LINE SIZE BALANCING VALVE
	LINE SIZE BALL VALVE (2'' & SMALLER) OR LINE SIZE BUTTERFLY VALVE (2-1/2'' & LARGER)
	LINE SIZE CHECK VALVE
	LINE SIZE UNION
	PRESSURE REDUCING VALVE
	PRESSURE RELIEF VALVE
	REDUCER
	THERMOMETER

PLUMBING NOTES, SYMBOLS & ABBREVIATIONS

DATE:	REV:	DESCRIPTION:

BOXABL INC.

5345 EAST NORTH BELT ROAD
NORTH LAS VEGAS, NV 89115, USA

+1(702) 500-9000 HELLO@BOXABL.COM

MODEL: 2 DOOR CASITA
BXB-000009

SHEET: P1.0

BOXABL

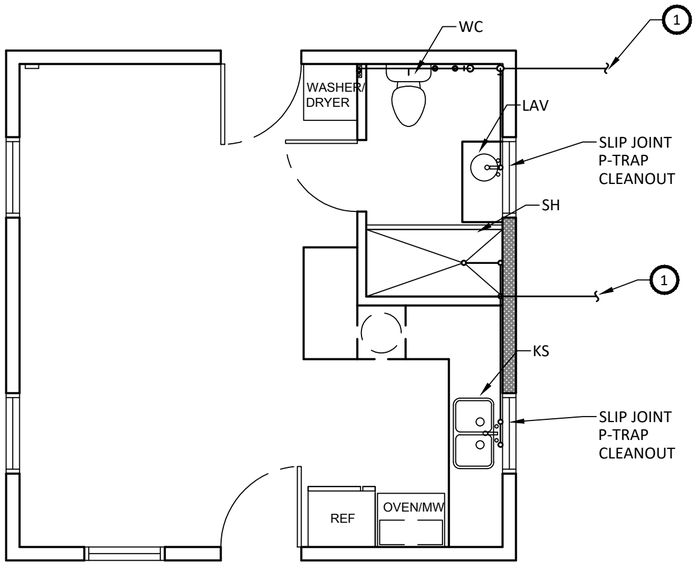

1 PLUMBING SANITARY PLAN
1/4" = 1'-0"

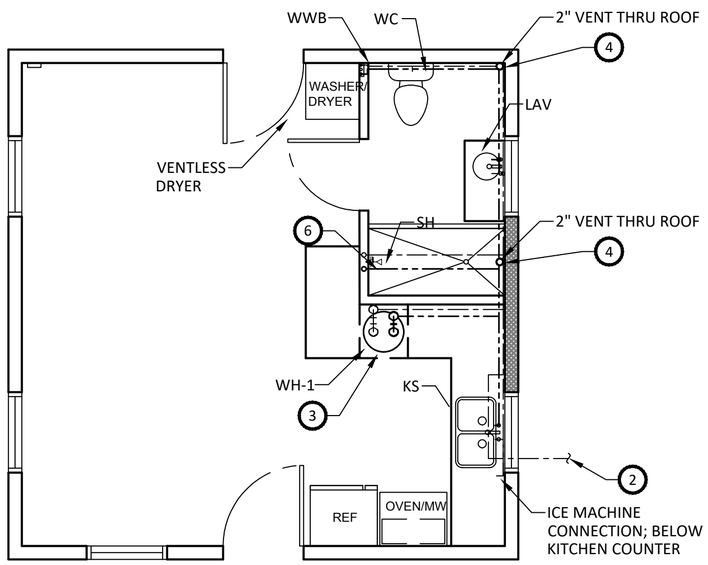

2 PLUMBING DOMESTIC WATER PLAN
1/4" = 1'-0"

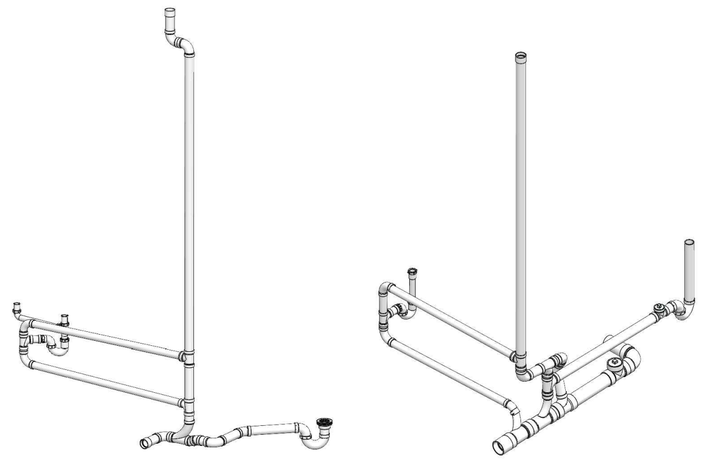

PIPING DIAGRAMS
NOT TO SCALE

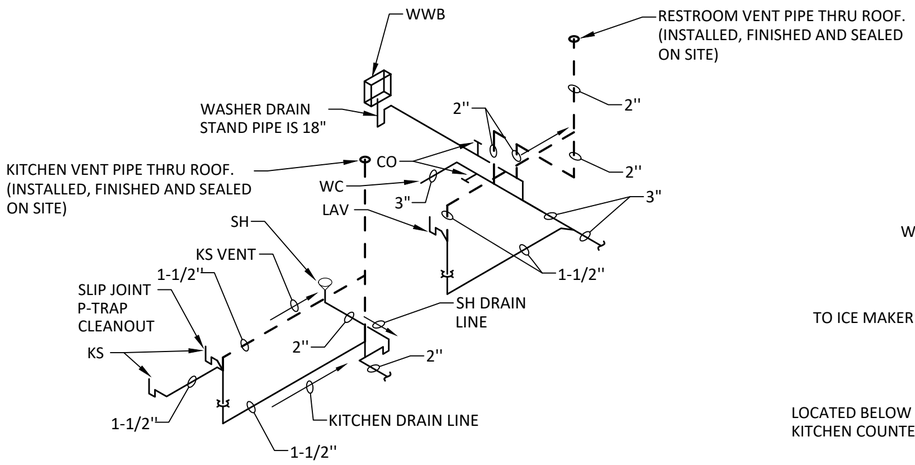

3 PLUMBING SANITARY ISOMETRIC
NOT TO SCALE

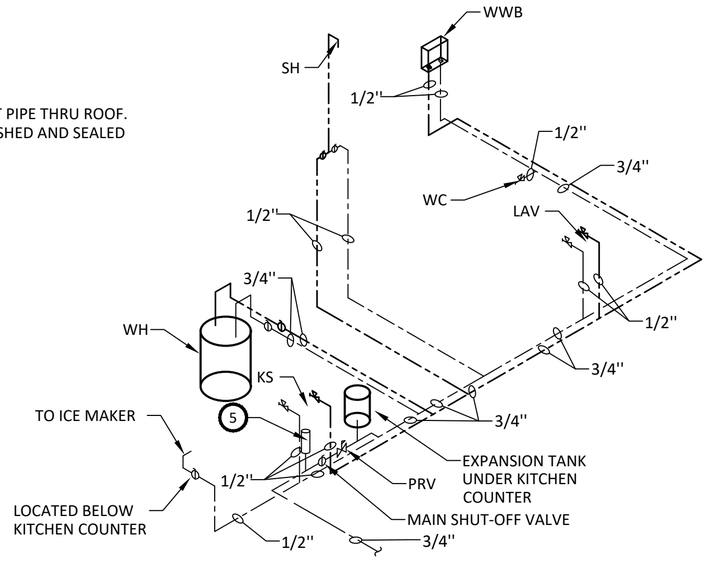

NOTE:
1. ALL HOT WATER PIPES SHALL BE WRAPPED WITH INSULATION WITH A MINIMUM R-3 INSULATING VALUE.

4 PLUMBING DOMESTIC WATER ISOMETRIC
NOT TO SCALE

PLAN NOTES

1	PROVIDE 2" & 3" SANITARY PIPING TO THE NEW BOXABL HOUSE. COORDINATE WITH CIVIL DRAWINGS THE EXACT LOCATION OF THE NEW SANITARY PIPING.
2	PROVIDE 3/4" DOMESTIC COLD WATER TO NEW BOXABL HOUSE. COORDINATE WITH CIVIL DRAWINGS THE EXACT LOCATION OF THE NEW DOMESTIC COLD WATER PIPING.
3	ACCESS TO THE TANK WATER HEATER IS THRU A REMOVABLE PANEL IN THE CABINET.
4	2" VENT THRU ROOF, SEE PIPING ISOMETRICS FOR ALL VENT PIPING. 2" COUPLING HUB AT EXTERIOR ROOF PANEL FOR ROOF VENT CONNECTION ON SITE. VENT SHALL BE 10' ABOVE BOTTOM OF FLOOR OF UNIT.
5	WHOLE HOUSE WATER HAMMER ARRESTOR MIFAB MODEL CL-A-NPB. WATER HAMMER ARRESTOR TO BE MAUFACTURED BY MIFAB OR AN APPROVED EQUIVALENT.
6	CONTROL VALVES AND SHOWERHEADS SHALL BE LOCATED ON THE SIDEWALL OF SHOWER COMPARTMENTS OR OTHERWISE ARRANGED SO THAT THE SHOWERHEAD DOES NOT DISCHARGE DIRECTLY AT THE ENTRANCE TO THE COMPARTMENT SO THAT THE BATHER CAN ADJUST THE VALVES PRIOR TO STEPPING INTO THE SHOWER SPRAY.

NO PLUMBING PIPES/LINES SHALL RUN WITHIN THE WALL/FLOOR/ROOF PANELS.

PLUMBING PLANS

DATE:	REV:	DESCRIPTION:

BOXABL INC.

5345 EAST NORTH BELT ROAD
NORTH LAS VEGAS, NV 89115, USA

+1(702) 500-9000 HELLO@BOXABL.COM

MODEL: 2 DOOR CASITA
BXB-000009

SHEET: P2.0

BOXABL

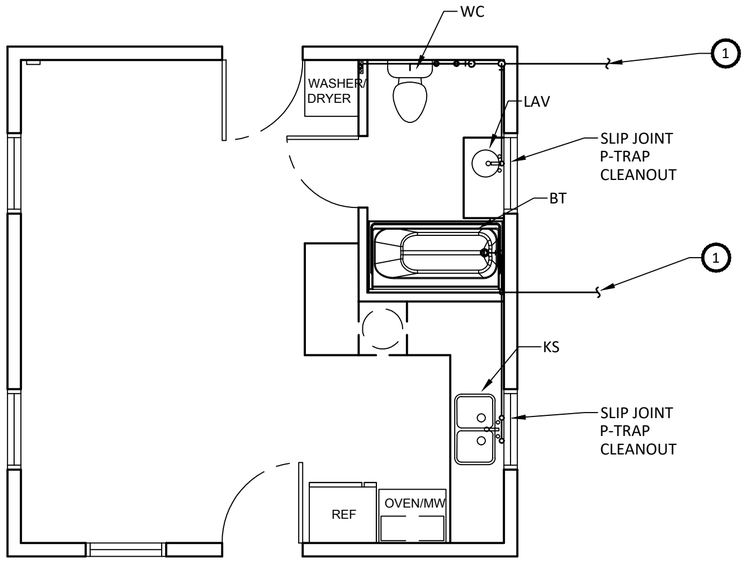

1 PLUMBING SANITARY PLAN

1/4" = 1'-0"

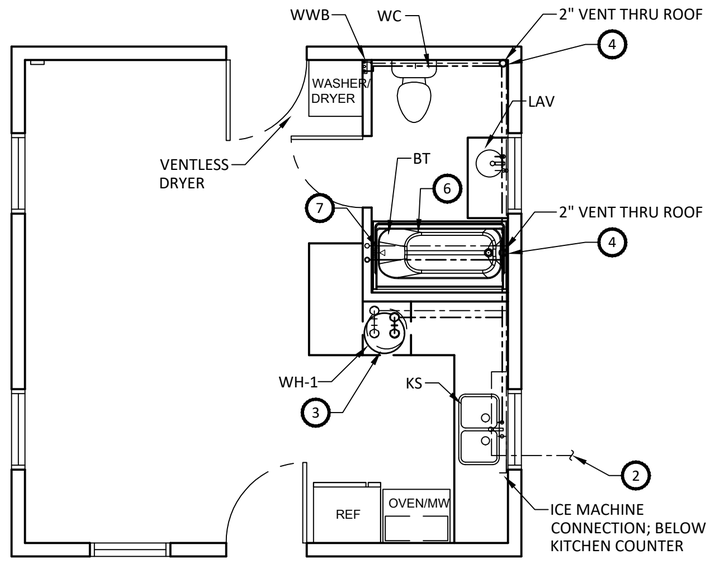

2 PLUMBING DOMESTIC WATER PLAN

1/4" = 1'-0"

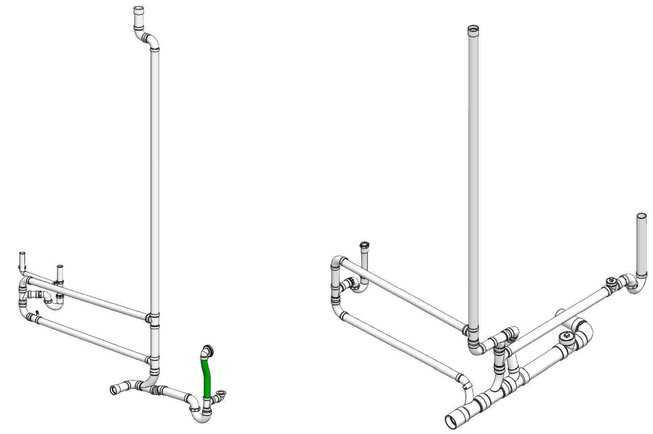

PIPING DIAGRAMS

NOT TO SCALE

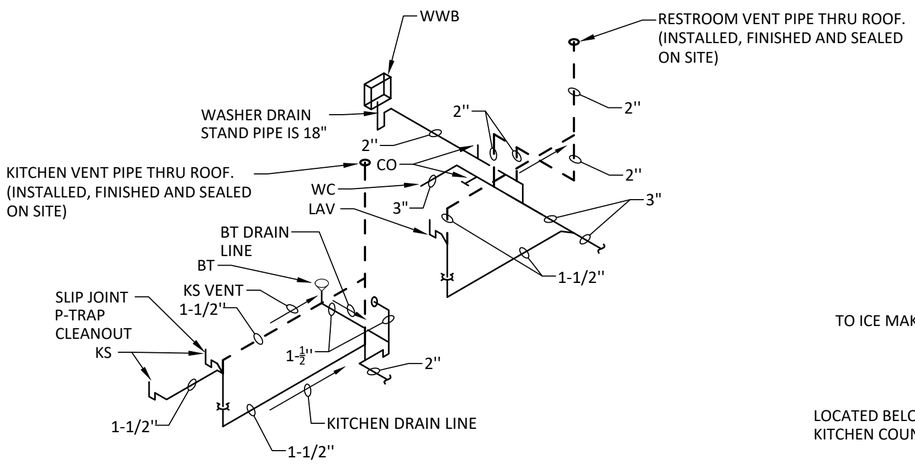

3 PLUMBING SANITARY ISOMETRIC

NOT TO SCALE

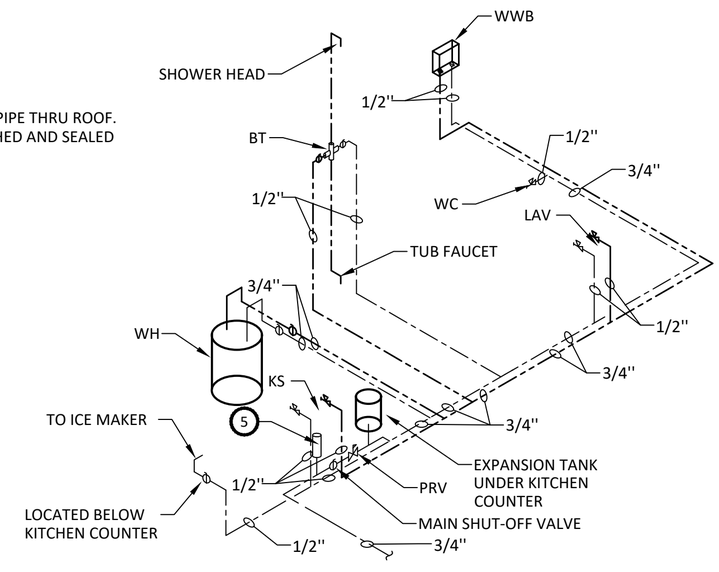

NOTE:

1. ALL HOT WATER PIPES SHALL BE WRAPPED WITH INSULATION WITH A MINIMUM R-3 INSULATING VALUE.

4 PLUMBING DOMESTIC WATER ISOMETRIC

NOT TO SCALE

PLAN NOTES

1	PROVIDE 2" & 3" SANITARY PIPING TO THE NEW BOXABL HOUSE. COORDINATE WITH CIVIL DRAWINGS THE EXACT LOCATION OF THE NEW SANITARY PIPING.
2	PROVIDE 3/4" DOMESTIC COLD WATER TO NEW BOXABL HOUSE. COORDINATE WITH CIVIL DRAWINGS THE EXACT LOCATION OF THE NEW DOMESTIC COLD WATER PIPING.
3	ACCESS TO THE TANK WATER HEATER IS THRU A REMOVABLE PANEL IN THE CABINET.
4	2" VENT THRU ROOF, SEE PIPING ISOMETRICS FOR ALL VENT PIPING. 2" COUPLING HUB AT EXTERIOR ROOF PANEL FOR ROOF VENT CONNECTION ON SITE. VENT SHALL BE 10' ABOVE BOTTOM OF FLOOR OF UNIT.
5	WHOLE HOUSE WATER HAMMER ARRESTOR MIFAB MODEL CL-A-NPB. WATER HAMMER ARRESTOR TO BE MAUFACTURED BY MIFAB OR AN APPROVED EQUIVALENT.
6	PROVIDE BATH TUB, COORDINATE EXACT MODEL, COLOR AND SIZE WITH OWNER.
7	CONTROL VALVES AND SHOWERHEADS SHALL BE LOCATED ON THE SIDEWALL OF SHOWER COMPARTMENTS OR OTHERWISE ARRANGED SO THAT THE SHOWERHEAD DOES NOT DISCHARGE DIRECTLY AT THE ENTRANCE TO THE COMPARTMENT SO THAT THE BATHER CAN ADJUST THE VALVES PRIOR TO STEPPING INTO THE SHOWER SPRAY.

NO PLUMBING PIPES/LINES SHALL RUN WITHIN THE WALL/FLOOR/ROOF PANELS.

PLUMBING PLANS

DATE:	REV:	DESCRIPTION:

BOXABL INC.

5345 EAST NORTH BELT ROAD
NORTH LAS VEGAS, NV 89115, USA

+1(702) 500-9000 HELLO@BOXABL.COM

MODEL: 2 DOOR CASITA
BXB-000009

SHEET: P2.1

BOXABL

FIXTURE SCHEDULES

FIXTURE	TYPE	MFG'R.	MODEL NO.	COLOR	FAUCET	TRAP	TRIM	SUPPLY FITTING	REMARKS
WC	WATER CLOSET	SANIFLO	083 & 005	WHITE	N/A	INTERGRAL P-TRAP	N/A	3/8"	1.28 GALLONS/FLUSH
LAV	LAVATORY	BEELEE	BL6790BH	MATTE BLACK	1.2 GPM	N/A	MATTE BLACK	3/8"	
KS	KITCHEN FAUCET	MOEN	5925BL	MATTE BLACK	1.5 GPM	N/A	MATTE BLACK	3/8"	
SH	SHOWER	MOEN	T2472EPBL	MATTE BLACK	1.75 GPM	N/A	MATTE BLACK	1/2"	
WWB-1	WASHER WALL BOX	SIOUX CHIEF	688-G10	WHITE	N/A	N/A	N/A	2 @1/2"	

NOTE: FIXTURES TO BE PROVIDE BY MANUFACTURER AS SCHEDULED OR AN APPROVED EQUIVALENT.

CA FIXTURE FLOW REQUIREMENTS

WC - WATER CLOSETS	1.28 GALLONS/FLUSH
LAV - LAVATORIES	1.2 GPM @ 60 PSI
KITCHEN SINK	1.8 GPM @ 60 PSI
SHOWER	1.8 GPM @ 80 PSI

WATER HEATER SCHEDULE

DESIG'N.	TYPE	MFG'R.	MODEL NO.	STORAGE GALLON CAPACITY	FIRST HOUR RATING GALLONS	ELECTRICAL			RECOVERY AT 80°F RISE	TANK LINING	WARRANTY	UEF	REMARKS
						KW	VOLTAGE	PHASE					
WH-1	TANK	BRADFORD WHITE	RE130L6	28	45	4.5	240	SINGLE	23	YES	YES	0.92	WATER HEATER TO BE C.E.C. LISTED.

NOTE: WATER HEATER TO BE MANUFACTURED BY BRADFORD WHITE OR AN APPROVED EQUAL.
WATER HEATER IS UNVENTED TYPE AND IS NOT PROVIDED WITH A FLUE COLLAR. WATER HEATER DOES NOT HAVE A VENT CONNECTION PER MANUFACTURER INSTALLATION MANUAL. WATER HEATER IS LISTED TO UL 174 WHICH DOES NOT STATE ANY REQUIREMENT FOR ELECTRIC WATER HEATER VENTILATION. PER CPC SECTION 509.2.1, VENTING IS NOT REQUIRED.

WATER SUPPLY FIXTURE UNITS

Quantity	Fixture Tag	Fixture	Occupancy	Type of Supply Control	Load Values in water supply fixture units (wsfu)			Total Load Values in water supply fixture units (wsfu)		
					Cold	Hot	Total	Cold	Hot	Total
1	DW	Dishwashing machine	Private	Automatic	0.00	1.40	1.40	0.00	1.40	1.40
1	IM	Ice Macine	Private	3/8" valve	0.25	0.00	0.25	0.25	0.00	0.25
1	KS	Kitchen sink	Private	Faucet	1.00	1.00	1.40	1.00	1.00	1.40
1	LAV	Lavatory	Private	Faucet	0.50	0.50	0.70	0.50	0.50	0.70
1	SH	Shower head	Private	Mixing valve	1.00	1.00	1.40	1.00	1.00	1.40
1	WM	Washing machine (8 lb)	Private	Automatic	1.00	1.00	1.40	1.00	1.00	1.40
1	WC	Water closet	Private	Flush tank	2.20	0.00	2.20	2.20	0.00	2.20
				Total WSFU				5.95	4.90	8.75

DRAINAGE FIXTURE UNITS

Quantity	Fixture Tag	Fixture Type	Drainage Fixture Unit Value As Load Factors	Minimum Size of Trap (inches)	Total Drainage Fixture Unit Value As Load Factors
1	WM	Automatic clothes washers, residential	2.00	2.00	2.00
1	DW	Dishwashing machine, domestic	2.00	1.50	2.00
1	KS	Kitchen sink, domestic	2.00	1.50	2.00
1	LAV	Lavatory	1.00	1.25	1.00
1	SH1	Shower Flow Rate 5.7 gpm or less	2.00	1.50	2.00
1	WC	Water closet, private (1.6 gpf)	3.00		3.00
		Total DFU's			12.00

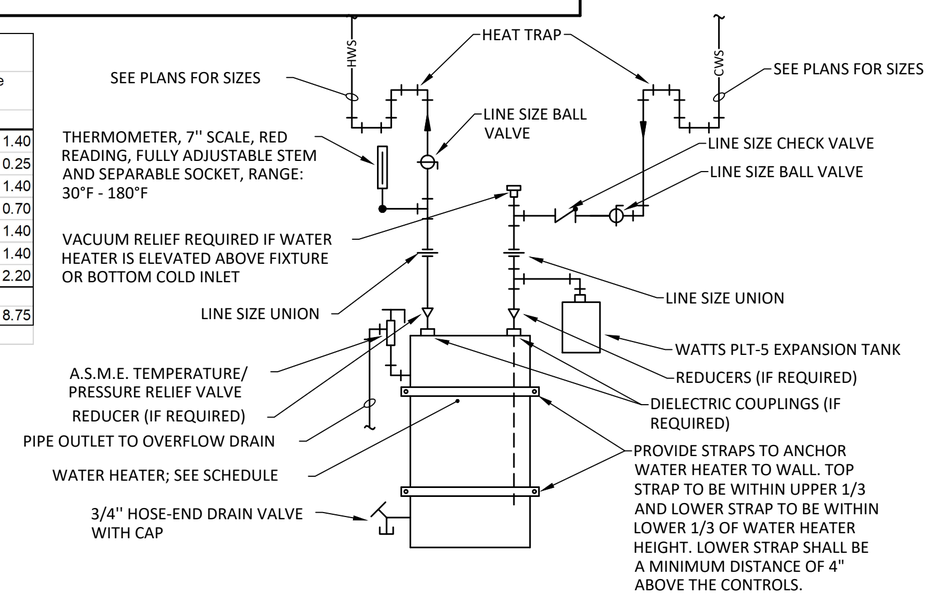

DOMESTIC WATER HEATER PIPING DETAIL - ELECTRIC

NOT TO SCALE

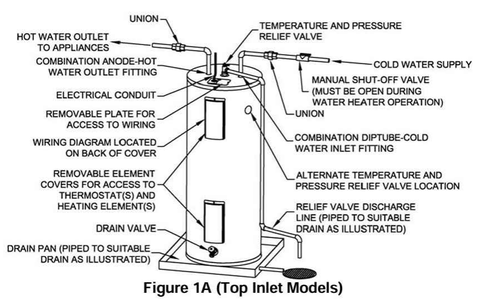

Figure 1A (Top Inlet Models)

General Features	
Rated Nominal Volume (Gallons):	28
DOE Rated Storage Volume (Gallons):	23
Fuel Type:	Electric
Energy Star:	No
Connectivity:	Not WiFi Compatible

Performance	
Element Watts:	4500
First Hour Delivery Rating (Gal.):	45
Uniform Energy Factor (UEF):	0.95
Recovery at 90°F Rise (GPH):	21

Weights and Dimensions	
Overall Height (in.):	31.813
Height (Floor To Top of Heater - in.):	29.563
Jacket Diameter (in.):	20
Weight (lbs.):	108

Venting and Connection Requirements	
Venting:	Non-Vented
Water Connection Size (in.):	3/4" NPT

DOMESTIC WATER HEATER TECHNICAL INFORMATION

NOT TO SCALE

PLUMBING DETAILS

DATE:	REV:	DESCRIPTION:

BOXABL INC.

5345 EAST NORTH BELT ROAD
NORTH LAS VEGAS, NV 89115, USA

+1(702) 500-9000 HELLO@BOXABL.COM

MODEL: 2 DOOR CASITA
BXB-000009

SHEET: P3.0

BOXABL

FIXTURE SCHEDULES

FIXTURE	TYPE	MFG'R.	MODEL NO.	COLOR	FAUCET	TRAP	TRIM	SUPPLY FITTING	REMARKS
WC	WATER CLOSET	SANIFLO	083 & 005	WHITE	N/A	INTERGRAL P-TRAP	N/A	3/8"	1.28 GALLONS/FLUSH
LAV	LAVATORY	BEELEE	BL6790BH	MATTE BLACK	1.2 GPM	N/A	MATTE BLACK	3/8"	
KS	KITCHEN FAUCET	MOEN	5925BL	MATTE BLACK	1.5 GPM	N/A	MATTE BLACK	3/8"	
BT	TUB/SHOWER	FAUCET: MOEN FIXTURE: AQUAMATIC	FAUCET: T2473EPBL FIXTURE: 6032STTM OR 2603SMTH	FAUCET: MATTE BLACK FIXTURE: PER OWNER	1.75 GPM	N/A	MATTE BLACK	1/2"	PROVIDE WITH INTEGRAL GRAB BAR SUPPORT
WWB-1	WASHER WALL BOX	SIOUX CHIEF	688-G10	WHITE	N/A	N/A	N/A	2 @1/2"	

NOTE: FIXTURES TO BE PROVIDE BY MANUFACTURER AS SCHEDULED OR AN APPROVED EQUIVALENT.

CA FIXTURE FLOW REQUIREMENTS

WC - WATER CLOSETS	1.28 GALLONS/FLUSH
LAV - LAVATORIES	1.2 GPM @ 60 PSI
KITCHEN SINK	1.8 GPM @ 60 PSI
TUB/SHOWER	1.8 GPM @ 80 PSI

WATER HEATER SCHEDULE

DESIG'N.	TYPE	MFG'R.	MODEL NO.	STORAGE GALLON CAPACITY	FIRST HOUR RATING GALLONS	ELECTRICAL			RECOVERY AT 80°F RISE	TANK LINING	WARRANTY	UEF	REMARKS
						KW	VOLTAGE	PHASE					
WH-1	TANK	BRADFORD WHITE	RE130L6	28	45	4.5	240	SINGLE	23	YES	YES	0.92	WATER HEATER TO BE C.E.C. LISTED.

NOTE: WATER HEATER TO BE MANUFACTURED BY BRADFORD WHITE OR AN APPROVED EQUAL.
WATER HEATER IS UNVENTED TYPE AND IS NOT PROVIDED WITH A FLUE COLLAR. WATER HEATER DOES NOT HAVE A VENT CONNECTION PER MANUFACTURER INSTALLATION MANUAL. WATER HEATER IS LISTED TO UL 174 WHICH DOES NOT STATE ANY REQUIREMENT FOR ELECTRIC WATER HEATER VENTILATION. PER CPC SECTION 509.2.1, VENTING IS NOT REQUIRED.

WATER SUPPLY FIXTURE UNITS

Quantity	Fixture Tag	Fixture	Occupancy	Type of Supply Control	Load Values in water supply fixture units (wsfu)			Total Load Values in water supply fixture units (wsfu)		
					Cold	Hot	Total	Cold	Hot	Total
1	DW	Dishwashing machine	Private	Automatic	0.00	1.40	1.40	0.00	1.40	1.40
1	IM	Ice Macine	Private	3/8" valve	0.25	0.00	0.25	0.25	0.00	0.25
1	KS	Kitchen sink	Private	Faucet	1.00	1.00	1.40	1.00	1.00	1.40
1	LAV	Lavatory	Private	Faucet	0.50	0.50	0.70	0.50	0.50	0.70
1	BT	Tub/Shower	Private	Mixing valve	1.00	1.00	1.40	1.00	1.00	1.40
1	WM	Washing machine (8 lb)	Private	Automatic	1.00	1.00	1.40	1.00	1.00	1.40
1	WC	Water closet	Private	Flush tank	2.20	0.00	2.20	2.20	0.00	2.20
				Total WSFU				5.95	4.90	8.75

DRAINAGE FIXTURE UNITS

Quantity	Fixture Tag	Fixture Type	Drainage Fixture Unit Value As Load Factors	Minimum Size of Trap (inches)	Total Drainage Fixture Unit Value As Load Factors
1	WM	Automatic clothes washers, residential	2.00	2.00	2.00
1	DW	Dishwashing machine, domestic	2.00	1.50	2.00
1	KS	Kitchen sink, domestic	2.00	1.50	2.00
1	LAV	Lavatory	1.00	1.25	1.00
1	BT	Tub/Shower Flow Rate 5.7 gpm or less	2.00	1.50	2.00
1	WC	Water closet, private (1.6 gpf)	3.00		3.00
		Total DFU's			12.00

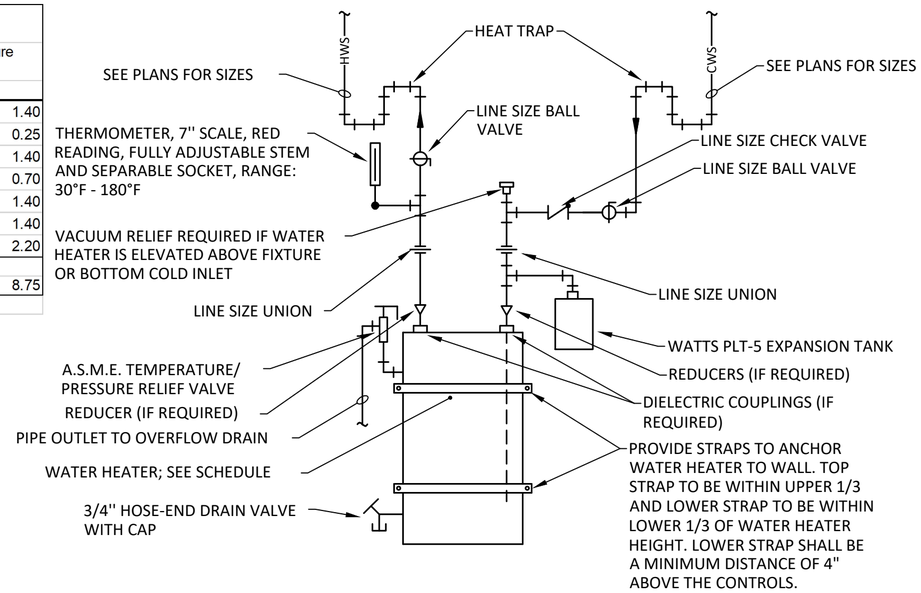

DOMESTIC WATER HEATER PIPING DETAIL - ELECTRIC

NOT TO SCALE

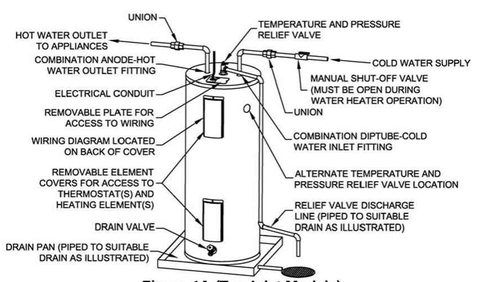

Figure 1A (Top Inlet Models)

General Features	
Rated Nominal Volume (Gallons):	28
DOE Rated Storage Volume (Gallons):	23
Fuel Type:	Electric
Energy Star:	No
Connectivity:	Not WiFi Compatible

Performance	
Element Watts:	4500
First Hour Delivery Rating (Gal.):	45
Uniform Energy Factor (UEF):	0.95
Recovery at 90°F Rise (GPH):	21

Weights and Dimensions	
Overall Height (in.):	31.813
Height (Floor To Top of Heater - in.):	29.563
Jacket Diameter (in.):	20
Weight (lbs.):	108

Venting and Connection Requirements	
Venting:	Non-Vented
Water Connection Size (in.):	3/4" NPT

DOMESTIC WATER HEATER TECHNICAL INFORMATION

NOT TO SCALE

PLUMBING DETAILS

DATE:	REV:	DESCRIPTION:

BOXABL INC.

5345 EAST NORTH BELT ROAD
NORTH LAS VEGAS, NV 89115, USA

+1(702) 500-9000 HELLO@BOXABL.COM

MODEL: 2 DOOR CASITA
BXB-000009

SHEET: P3.1

BOXABL

FAN COIL UNIT SCHEDULE

DESIG'N.	MFG'R.	MODEL NO.	AIR QUANTITY (CFM)	COOLING					HEATING			ELECTRICAL				COMPRESSOR	TYPE OF MOUNTING	HSPF	SEER	REMARKS
				E.A.T. DB °F/WB °F	L.A.T. DB °F/WB °F	TOTAL CAPACITY (BTU/HR)	REFRIGERANT	REFRIGERANT CHARGE	E.A.T. (°F)	L.A.T. (°F)	TOTAL CAPACITY @ 47°F	VOLTAGE	PHASE (Ø)	MCA	MOCP					
CU-1	MITSUBISHI	MUZ-WR12NA										230	1	10	15	ROTORY INVERTER	ON GRADE			
	LG	LSU120HFV3										230	1	10	15					
FCU-1	MITSUBISHI	MSZ-WR12NA	400	75.0/62.3	55.0/53.4	12,000	R410A	1 LB 12 OZ	60.0	88.2	12,200						WALL HUNG	8.50	16.00	
	LG	LSN120HFV3	459															8.50	17.00	

NOTE: UNITS TO BE MANUFACTURER BY MITSUBISHI, LG OR AN APPROVED EQUIVALENT UNIT.

Table 4-5c: Residential Space-Cooling systems Pipe Insulation (thickness in inches) (Refrigerant)

Fluid Operating Temperature Range °F	Insulation Conduct. (Btu-in/h-ft^2-°F)	Insulation Mean Rating Temperature (°F)	Pipe Diameter < 1"	REMARKS
40-60	0.21-0.27	75	0.75	

Note: Insulation used for refrigerant suction lines outside of a conditioned space, must include a Class I or Class II vapor retarded. The vapor retarded and insulation must be protected from physical damage, UV deterioration and moister with a covering that can be removed for equipment maintenance without destroying the insulation.

EXHAUST FAN SCHEDULE

DESIG'N	SERVICE	MFG'R	MODEL NO.	TYPE	CFM	STATIC PRESSURE ("W.C.)	DRIVE	ELECTRICAL			BACKDRAFT DAMPER	OPER. WEIGHT (LBS.)	ENERGY STAR COMPLIANT	EFFICIENCY RATING CFM/WATT	REMARKS
								H.P. (WATTS)	PHASE (Ø)	VOLTAGE					
EF-1	RESTROOM			WALL	70	0.250	DIRECT		1	115	GRAVITY	8	YES	6.4	
		DELTA	SLM 70					(11.5)						5.8	

NOTE: UNITS TO BE MANUFACTURED BY ADDVENT, DELTA, OR AN APPROVED EQUIVALENT UNIT.

Table 4-6: Minimum Cooling Efficiencies for Central Air Conditioners and Heat Pumps for Heat Pumps

Applicance	Type	SEER Required	EER Required	SEER Specified	REMARKS
Central air source heat	Split System	14.0	NR	16.0	

Table 4-3: Minimum Heating Efficiency for Heat Pumps

Equipment Type	Reference	Configuration/Size	Minimum Heating Efficiency	Heating efficiency Specified	REMARKS
Single-phase air source heat pumps (NAECA)	Table C-3	< 65,000 Bth/h cooling	Split 8.2 HSPF	8.5 HSPF	

MUZ-WR09NA MUZ-WR12NA

Unit: Inch (mm)

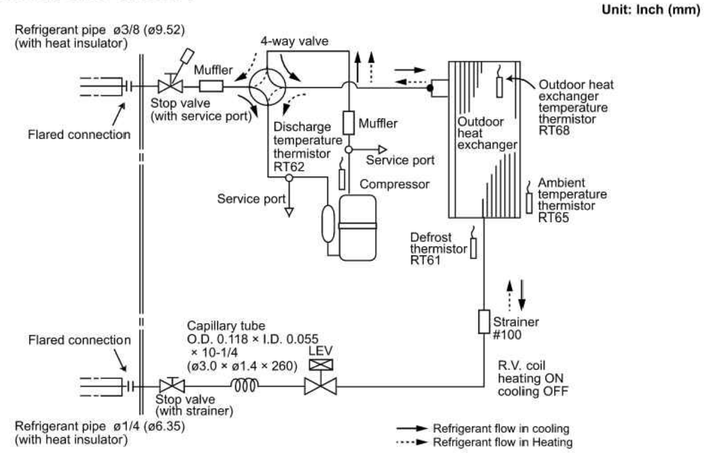

REFRIGERATION PIPING SYSTEM SCHEMATIC DETAIL

NOT TO SCALE

MECHANICAL DETAILS

DATE:	REV:	DESCRIPTION:

BOXABL INC.

5345 EAST NORTH BELT ROAD
NORTH LAS VEGAS, NV 89115, USA

+1(702) 500-9000 HELLO@BOXABL.COM

MODEL: 2 DOOR CASITA
BXB-000009

SHEET: M3.0

BOXABL

WHOLE HOUSE VENTILATION SYSTEM SHALL BE COMPRISED OF TOILET EXHAUST FAN, 70 CFM AND INTAKE LOUVER. VENTILATION RATE OF 20 CFM IS BASED ON EQUATION 15-1 USING 361 SQUARE FEET AND ONE BEDROOM. PER THESE CAPACITIES THE TOILET EXHAUST FAN WILL OPERATE 29% OF EACH 4 HOUR SEGMENT.

PLAN NOTES

1	NEW CONDENSING UNIT, CU-1. PROVIDE CONCRETE PAD TO HAVE THE CONDENSING UNIT ON A LEVEL SURFACE. COORDINATE EXACT LOCATION WITH ARCHITECT AND BUILDING OWNER.
2	TERMINATE CONDENSATE DRAIN FROM FCU-1 TO EXTERIOR. PROVIDE SPLASH BLOCK ON GRADE. COORDINATE EXACT LOCATION WITH ARCHITECT AND BUILDING OWNER.
3	PROVIDE THERMOSTAT, LG MODEL PREMTBVC3. MOUNT TOP OF THERMOSTAT 48" AFF MAXIMUM.
4	REFRIGERANT PIPING ROUTED IN WALL, SEE MANUFACTURER'S INSTALLATION INSTRUCTIONS FOR SIZING.
5	PROVIDE HOODED WALL CAP.
6	INTAKE FOR WHOLE HOUSE VENTILATION SYSTEM. VENT-US MODEL PS-101. INTAKE TO BE LOCATED UNDER UPPER CABINETS, MINIMUM 3' BELOW EXHAUST DISCHARGE VENT FROM MICROWAVE.
7	EXHAUST DISCHARGE FROM EXHAUST FAN THAT IS INTEGRAL TO THE MICROWAVE. EXHAUST CAPACITY SHALL BE 300 CFM AND BE EXHAUSTED DIRECTLY TO THE OUTDOORS. EXHAUST FAN TO HAVE MANUAL SWITCH FOR CONTROL.
8	TIMER SWITCH TO CONTROL BATHROOM EXHAUST FAN. EXHAUST FAN IS A COMPONENT OF WHOLE HOUSE VENTILATION SYSTEM SO A HUMIDITY CONTROL IS NOT REQUIRED PER TITLE 24 4.506.1.

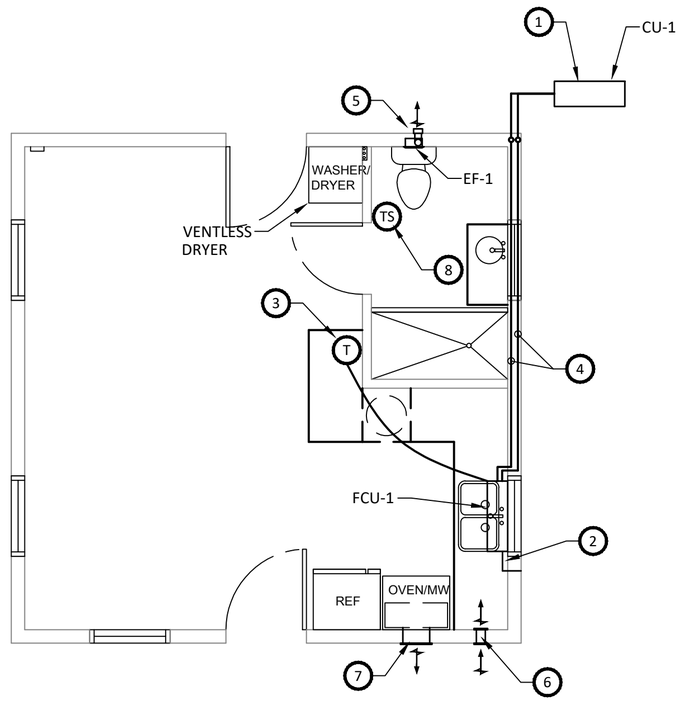

1 MECHANICAL PLAN
1/4" = 1'-0"

MECHANICAL PLAN

DATE:	REV:	DESCRIPTION:

BOXABL INC.

5345 EAST NORTH BELT ROAD
NORTH LAS VEGAS, NV 89115, USA

+1(702) 500-9000 HELLO@BOXABL.COM

MODEL: 2 DOOR CASITA
BXB-000009

SHEET: M2.0

BOXABL

GENERAL

1. MECHANICAL SYSTEMS SHALL BE INSTALL IN ACCORDANCE WITH ALL APPLICABLE BUILDING CODES.

2. DRAWINGS FOR MECHANICAL WORK ARE DIAGRAMMATIC, SHOWING THE GENERAL LOCATION, TYPE, LAYOUT AND EQUIPMENT REQUIRED. THE DRAWINGS SHALL NOT BE SCALED FOR EXACT MEASUREMENTS. REFER TO MANUFACTURERS STANDARD INSTALLATION DRAWINGS FOR EQUIPMENT CONNECTIONS AND INSTALLATION REQUIREMENTS AS REQUIRED. FURNISH AND INSTALL DUCTWORK, CONNECTIONS, ACCESSORIES, OFFSETS AND MATERIALS NECESSARY TO FACILITATE THE SYSTEMS FUNCTIONING AS INDICATED BY THE DESIGN AND THE EQUIPMENT INDICATED. THE WORK SHALL BE IN ACCORDANCE WITH LOCAL CODES AND ORDINANCES AND SUBJECT TO INSPECTION.

3. THE MECHANICAL SYSTEMS SHALL BE COMPLETE WITH ALL NECESSARY APPURTENANCES FOR A COMPLETE OPERATING SYSTEM.

4. THE CONTRACTOR SHALL WARRANTEE ALL MATERIAL AND GUARANTEE ALL WORKMANSHIP FOR ONE YEAR FROM SUBSTANTIAL COMPLETION.

BASIC MATERIALS AND METHODS

1. MATERIALS SHALL BEAR UNDERWRITERS LABEL OR OTHER CERTIFIED LISTING AGENCIES WHERE SUCH STANDARDS HAVE BEEN ESTABLISHED AND LISTED BY UNDERWRITER'S LABORATORIES, INC. MATERIALS, EQUIPMENT AND APPLIANCES SHALL CONFORM TO THE LATEST STANDARDS OF:

AMCA	-AIR MOVING AND CONDITIONING ASSOCIATIONS, INC.
SMACNA	-SHEET METAL AND AIR CONDITIONING CONTRACTOR NATIONAL ASSOCIATION, INC.
ASHRAE	-AMERICAN SOCIETY OF HEATING, REFRIGERATION AND AIR CONDITIONING ENGINEERS
ASME	-AMERICAN SOCIETY OF MECHANICAL ENGINEERS
ASTM	-AMERICAN SOCIETY FOR TESTING MATERIALS
NEMA	-NATIONAL ELECTRICAL MANUFACTURER'S ASSOCIATION
ARI	-AIR CONDITIONING AND REFRIGERATION INSTITUTE
ANSI	-AMERICAN NATIONAL STANDARDS INSTITUTE
IAPMO	-INTERNATIONAL ASSOCIATION OF PLUMBING AND MECHANICAL OFFICIALS

COORDINATION

1. COORDINATE WITH GENERAL CONTRACTOR FOR ALLOWABLE DAYS OF WEEK AND TIMES OF DAY FOR SYSTEMS SHUT DOWNS AS REQUIRED FOR THE CONSTRUCTION WORK.

2. THE MECHANICAL CONTRACTOR SHALL COORDINATE DUCTWORK INSTALLATION WITH ARCHITECTS/OWNERS REPRESENTATIVE IN FIELD AND OTHER TRADES.

3. THE MECHANICAL CONTRACTOR SHALL COORDINATE VOLTAGE OF ALL EQUIPMENT WITH ELECTRICAL PRIOR TO ORDERING EQUIPMENT.

INSTALLATION

1. CORE-DRILL OR SAW-CUT FLOOR, WALL, ROOF, ETC. AS REQUIRED FOR PIPING OR DUCTWORK AND FIRE-STOP OPENING AROUND PIPE OR DUCTWORK. VERIFY LOCATION OF STRUCTURAL BEAMS, JOISTS, ETC. BEFORE DRILLING OR CUTTING. NOTIFY ARCHITECT OF ANY DISCREPANCIES.

2. WHEREVER FOUNDATION WALLS, OUTSIDE WALLS, ROOFS, ETC. ARE CUT FOR INSTALLATION OF SYSTEMS, THEY SHALL BE PATCHED TO MATCH EXISTING CONSTRUCTION AND SEALED WEATHER-TIGHT. WORK SHALL BE PERFORMED BY CRAFTSMEN SKILLED IN THEIR RESPECTIVE TRADES.

3. ALL PIPING THAT IS EXPOSED TO VIEW SHALL BE ROUTED AS HIGH AS POSSIBLE AND TIGHT TO THE UNDERSIDE OF THE STRUCTURAL ABOVE.

4. ALL OUTSIDE AIR INTAKES SHALL BE A MINIMUM OF 10'-0" AWAY FROM EXHAUST DISCHARGE OPENINGS AND PLUMBING VENT STACKS.

EQUIPMENT

1. THE MECHANICAL CONTRACTOR SHALL INSTALL MECHANICAL SYSTEMS AS SHOWN, NOTED AND SPECIFIED. EQUIPMENT MAY NOT BE SUBSTITUTED UNLESS WRITTEN APPROVAL BY THE ARCHITECT, ENGINEER OR OWNER'S REPRESENTATIVE IS OBTAINED. ANY CHANGES TO THE DUCTWORK LAYOUT WILL NECESSITATE SUBMISSION OF SHEET METAL SHOP DRAWINGS FOR ENGINEER'S REVIEW. ANY UNAUTHORIZED CHANGES WILL BE REMOVED AT CONTRACTOR'S EXPENSE, IF DEEMED NECESSARY BY ARCHITECT, ENGINEER, OR OWNER'S REPRESENTATIVE.

2. UPON SELECTION OF THE MECHANICAL APPLIANCES, SUBMIT THE MANUFACTURER'S INSTALLATION INSTRUCTIONS TO THE BUILDING DEPARTMENT, INCLUDING LISTING FOR OUTSIDE INSTALLATION WHERE APPLICABLE.

AIR DISTRIBUTION

1. ALL DUCTWORK SHALL BE FABRICATED ACCORDING TO THE SMACNA LOW VELOCITY DUCT MANUAL, ASHRAE HANDBOOK VOLUME "HVAC SYSTEMS AND EQUIPMENT", AND TYPICAL DUCTWORK DETAILS SHOWN IN THESE DRAWINGS. ALL ELBOWS SHALL HAVE PROPER RADIUS. SIZES SHOW ON PLAN ARE INSIDE FREE AREA.

2. ALL FLEXIBLE DUCTWORK SHALL FACTORY ASSEMBLED CLASS 1 AIR DUCT (UL 181) WITH FIBERGLASS INSULATION AND REINFORCED OUTER PROTECTIVE COVER/VAPOR BARRIER. FLEX DUCT SHALL MEET NFPA 90A WITH FLAME SPREAD UNDER 25, SMOKE DEVELOPED UNDER 50, AND SHALL BE RATED FOR 2" W.C. PRESSURE AND 0 TO 250 DEGREE TEMPERATURE. MAXIMUM STRETCHED OUT LENGTH SHALL BE AS PER CODES.

3. PROVIDE UL APPROVED FIRE DAMPERS FOR ALL PENETRATIONS THROUGH FIRE RATED WALLS, PARTITIONS, CEILINGS, AND FLOORS. INSTALL FIRE DAMPERS AS PER MANUFACTURER'S DIRECTIONS AND PER UL GUIDELINES. PROVIDE ACCESS AS REQUIRED FOR SERVICING OF FIRE DAMPERS.

4. ALL CONTRACTOR FABRICATED AND MANUFACTURER FABRICATED COMPONENTS OF THE OUTSIDE AIR, SUPPLY AIR, RETURN AIR AND EXHAUST SYSTEMS SHALL BE CONSTRUCTED AND INSTALLED AIR-TIGHT. THE INSTALLED SYSTEMS SHALL BE PRESSURE TESTED AS SPECIFIED. PIPE OPENINGS IN SYSTEM COMPONENTS SHALL HAVE SHEET METAL BAFFLES, SET IN SEALANT, TO PREVENT LEAKAGE.

AUTOMATIC TEMPERATURE CONTROLS

1. CONTRACTOR SHALL FURNISH AND INSTALL ALL CONTROL WIRING AS REQUIRED. THERMOSTATS SHALL BE AS SPECIFIED OR AS FURNISHED WITH THE EQUIPMENT. PROVIDE TRANSFORMERS AS REQUIRED.

TESTING AND BALANCING

1. BALANCING CONTRACTOR SHALL BALANCE SYSTEMS TO AIR QUANTITIES SHOWN ON PLAN. BALANCING CONTRACTOR SHALL USE DUCT MOUNTED MANUAL DAMPERS FOR AIR SYSTEM BALANCING. USE OF A TERMINAL DAMPER IS NOT ACCEPTABLE.
2. TESTING AND BALANCING CONTRACTOR SHALL TEST ALL HVAC EQUIPMENT TO ENSURE PROPER OPERATION, TEST ALL CONTROLS TO ENSURE PROPER OPERATION, CALIBRATION AND ADJUSTMENT OF CONTROLS, AND TEST ECONOMIZERS TO ENSURE PROPER OPERATION.

3. THE ARCHITECT AND/OR OWNER'S REPRESENTATIVE SHALL BE NOTIFIED 48 HOURS OR MORE PRIOR TO FINAL TESTING AND BALANCING WORK SO THAT THEY AND/OR THE ENGINEER MAY BE PRESENT TO OBSERVE THIS WORK. THE BALANCING CONTRACTOR SHALL SUBMIT WRITTEN REPORTS OF ALL AIR FLOW READINGS, STATIC PRESSURES, GPM RATES, PRESSURE READINGS, TEMPERATURE READINGS, MOTOR AMPERAGE, ETC., TO DOCUMENT PROPERLY OPERATING AND BALANCED MECHANICAL SYSTEMS IN ALL AREAS. A COPY OF THE TEST AND BALANCE REPORT SHALL BE SUBMITTED TO THE AUTHORITIES HAVING JURISDICTION PRIOR TO FINAL INSPECTION AND REQUESTING OCCUPANCY.

CLOSEOUT DOCUMENTATION

1. THE CONTRACTOR SHALL FURNISH TO THE BUILDING OWNER WITHIN 90 DAYS OF DATE OF RECEIPT OF THE CERTIFICATE OF OCCUPANCY THE FOLLOWING;
   A. OPERATING AND MAINTENANCE MANUAL. MANUAL SHALL CONSIST OF MANUFACTURER'S RECOMMENDATIONS, PROGRAMMING PROCEDURES AND DATA POINTS, NARRATIVE AND OTHER MEANS OF ILLUSTRATING TO THE OWNER HOW THE BUILDING, EQUIPMENT AND SYSTEMS ARE INTENDED TO BE INSTALLED, MAINTAINED AND OPERATED.
   B. AS-BUILT HVAC DRAWINGS.
   C. BALANCE REPORT OF HVAC SYSTEMS.

MECHANICAL ABBREVIATIONS

A.D.	ACCESS DOOR
A.F.F.	ABOVE FINISHED FLOOR
ACCU	AIR COOLED CONDENSING UNIT
CC	COOLING COIL
CV	CONTROL VALVE
EF	EXHAUST AIR FAN
F.C.U	FAN COIL UNIT
N.T.S.	NOT TO SCALE
S.C.D.	SEE CONSTRUCTION DRAWINGS
S.S.	STAINLESS STEEL
T	THERMOSTAT
U.N.O.	UNLESS NOTED OTHERWISE
ARCH	ARCHITECT OR ARCHITECTURAL
BLD'G	BUILDING
BOT.	BOTTOM
CL'G.	CEILING
CONC.	CONCRETE
DET.	DETAIL
DN.	DOWN
DWG.	DRAWING
E.A.T.	ENTERING AIR TEMPERATURE
GA.	GAUGE
H/AC	HEATING AND AIR CONDITIONING
L.A.T.	LEAVING AIR TEMPERATURE
MT'D	MOUNTED
S.S.T.	SATURATED SUCTION TEMPERATURE
T.S.P.	TOTAL STATIC PRESSURE
W/	WITH
Ø	DIAMETER/ROUND
0'-0''	ELEVATION FROM FINISH FLOOR

MECHANICAL SYMBOLS

T DEVICE	THERMOSTAT WITH DEVICE CONTROLLED.
CD	CONDENSATE DRAINAGE PIPING
L	REFRIGERANT LIQUID PIPING
S	REFRIGERANT SUCTION PIPING
	LINE SIZE GATE VALVE
	LINE SIZE BALL VALVE (2'' & SMALLER) OR LINE SIZE BUTTERFLY VALVE (2-1/2'' & LARGER)
	LINE SIZE BALANCING VALVE
	LINE SIZE CHECK VALVE
	LINE SIZE UNION

Mandatory Measures

1. THERMOSTAT PROVIDED SHALL BE A SET-BACK TYPE, CAPABLE OF ALLOWING THE OCCUPANT TO PROGRAM SET POINTS FOR AT LEAST FOUR PERIODS WITH-IN 24 HOUR TIME SPAN.

MECHANICAL NOTES SYMBOLS & ABBREVIATIONS

DATE:	REV:	DESCRIPTION:

BOXABL INC.

5345 EAST NORTH BELT ROAD
NORTH LAS VEGAS, NV 89115, USA

+1(702) 500-9000 HELLO@BOXABL.COM

MODEL: 2 DOOR CASITA
BXB-000009

SHEET: M1.0

BOXABL

ELECTRICAL SPECIFICATIONS:

E1. A QUALIFIED ELECTRICIAN SHALL FURNISH AND INSTALL ALL LABOR, TOOLS, MATERIAL, EQUIPMENT, SERVICES, AND RELATED ACCESSORIES NECESSARY FOR THE COMPLETE INSTALLATION OF ELECTRICAL WORK SHOWN ON THE DRAWINGS, SPECIFIED IN THE NOTES, AND REQUIRED BY LOCAL CODE AUTHORITIES.

E2. ALL WORK SHALL COMPLY WITH THE CURRENT EDITIONS OF THE NATIONAL ELECTRICAL CODE AND INTERNATIONAL RESIDENTIAL CODE.

E3. OBTAIN AND PAY FOR ALL PERMITS AND FEES RELATING TO ELECTRICAL SYSTEM.

E4. IT IS INTENDED THAT ALL ITEMS OF WORK AND SYSTEMS BE COMPLETE AND WIRED COMPLETE IN ALL DETAILS, READY FOR SATISFACTORY OPERATION AND SERVICE. APPARATUS REQUIRED SHALL BE FURNISHED, EVEN THOUGH NOT SPECIFICALLY MENTIONED HEREIN, OR SHOWN ON THE DRAWINGS.

E5. PROVIDE GROUNDING OF ELECTRICAL WORK IN STRICT ACCORDANCE WITH THE APPLICABLE CODES AND THEIR AUTHORITIES.

E6. COORDINATE ALL WORK WITH OTHER TRADES PRIOR TO ANY INSTALLATION.

E7. PROVIDE CODE APPROVED CLEARANCES AROUND ELECTRICAL EQUIPMENT.

E8. MATERIALS AND EQUIPMENT SHALL BE NEW AND SHALL CONFORM TO THE NEMA STANDARDS, NATIONAL ELECTRICAL CODE (NEC) IN EVERY CASE, WHERE SUCH STANDARDS HAVE BEEN ESTABLISHED. ALL ELECTRICAL MATERIALS, DEVICES, APPLIANCES, FITTINGS AND OTHER EQUIPMENT SHALL BE LISTED AND LABELED BY A QUALIFIED TESTING AGENCY AND SHALL BE CONNECTED IN AN APPROVED MANNER WHEN INSTALLED.

E9. TESTING - AFTER WIRES ARE IN PLACE AND CONNECTED TO DEVICES AND EQUIPMENT, THE SYSTEM SHALL BE TESTED FOR SHORTS AND GROUNDS. ALL HOT WIRES, IF SHORTED OR GROUNDED, SHALL BE REMOVED AND REPLACED.

E10. ALL METERS, INSTRUMENTS, CABLE CONNECTION, EQUIPMENT, OR APPARATUS NECESSARY FOR MAKING ALL TESTS, SHALL BE FURNISHED BY THIS CONTRACTOR AT HIS OWN EXPENSE.

E11. AFTER THE COMPLETION OF THE INSTALLATION, THE ENTIRE SYSTEM SHALL BE THOROUGHLY CLEANED. CLEAN ALL FOREIGN MATTER, PAINT, OIL, DIRT, UNREQUIRED LABELS, GREASE, AND STICKERS FROM FIXTURES AND EQUIPMENT. REMOVE FROM THE PREMISES ALL RUBBISH, DEBRIS, ETC. ACCUMULATED BY THE ELECTRICAL INSTALLATION.

E12. THE CONTRACTOR SHALL BE RESPONSIBLE FOR PROTECTING ALL EQUIPMENT AND SYSTEMS AGAINST HARMFUL EXPOSURE, OR ACCUMULATION OF DUST/MOISTURE, FLOODING, CORROSION, OR OTHER FORMS OF DAMAGE. CLEAN AND RESTORE DAMAGED FINISHES AND EQUIPMENT TO PLACE INSTALLATION IN A LIKE-NEW CONDITION.

E13. UNLESS SPECIFICALLY NOTED OTHERWISE, ALL INTERIOR WIRING SHALL BE NM-B CABLE. ELECTRICIAN SHALL PROVIDE EXTENSION OF ALL CABLE FROM JUNCTION BOX TO ELECTRICAL PANEL. PROVIDE CODE COMPLIANT RACEWAY AND WIRING FROM INTERIOR JUNCTION BOX TO EXTERIOR PANEL. SEAL OPENING WEATHERTIGHT. PROVIDE INTERCONNECTION OF CABLES BETWEEN THE WALLS AND ROOF PANELS. THERE MAY BE SEVERAL CIRCUITS IN EACH PANEL. EACH IS LABLED WITH CIRCUIT NAME, CONNECT CIRCUITS OF LIKE NAMES.

E14. DISCONNECT SWITCHES SHALL BE QUICK-MAKE, QUICK-BREAK TYPE IN NEMA ENCLOSURE TO MATCH LOCATION AND USE. SWITCHES SHALL BE LISTED FOR THEIR USE.

E15. PANEL/LOAD CENTER SHALL BE AS SHOWN ON THE DRAWINGS WITH 100A-2P MAIN BREAKER AND BRANCH BREAKERS AS SCHEDULED. UNIT IS PROVIDED IN A NEMA 3R ENCLOSURE FOR EXTERIOR MOUNTING. INSTALL IN ACCORDANCE WITH MANUFACTURER'S INSTRUCTIONS. INSTALL BREAKERS AS REQUIRED. PANEL/LOAD CENTERS SHALL BE SQUARE D QO SEREIS WITH QO BREAKERS OR EATON, SEIMENS OR GENERAL ELECTRIC EQUIVELENT. TERMINATE ALL CABLING AND WIRING AT PANEL/LOAD CENTER IN ACCORDANCE WITH NEC REQUIREMENTS.

E16. INSTALL COMBINATION WASHER/DRYER BACKBOX WIRING AND PLUG IN WALL.

E17. ASSEMBLE AND INSTALL PENDANT LIGHT FURNISHED WITH UNIT. PENDANT LIGHT SHALL BE LISTED PER 410.10(D).

E18. INSTALL SMOKE DETECTOR FURNISHED WITH UNIT.

E19. ASSEMBLE AND INSTALL EXTERIOR SCONCE LIGHT FURNISHED WITH UNIT BY FRONT AND BACK DOORS. SEAL LIGHT TO EXTERIOR WALL TO BE WEATHER TIGHT.

E20. ALL EQUIPMENT LOCATED OUTDOORS SHALL BE WEATHERPROOF TYPE.

E21. FURNISH AND INSTALL A COMPLETE AND OPERABLE SYSTEM OF SERVICE AND DISTRIBUTION FROM THE UTILITY COMPANY TRANSFORMERS OR FROM FEED FROM ANOTHER STRUCTURE TO THE PANEL/LOAD CENTER AS REQUIRED. PROVIDE A 120/240V., 1PH., 3W. SERVICE OR FEEDER TO THE LOAD CENTER RATED AT 100 AMPERES. MINIMUM FEEDER SIZE TO THE HOUSE SHALL BE 3 # 1 AWG COPPER CONDUCTORS. COORDINATE FINAL GROUNDING WITH METHOD OF FEEDING. SUGGESTED SERVICE GROUNDING DETAIL IS FOR UTILITY FED BUILDING.

E22. TWO SMALL APPLIANCE 20A BRANCH CIRCUITS HAVE BEEN PROVIDED PER NEC 210.11 (C)(1) SERVING ONLY ABOVE COUNTER RECEPTACLES.

E23. LAUNDRY AREA 20A BRANCH CIRCUITS HAS BEEN PROVIDED PER NEC 210.11 (C)(2) SERVING ONLY LAUNDRY AREA.

E24. INDIVIDUAL APPLIANCE BRANCH CIRCUITS HAVE BEEN PROVIDED SERVING DEDICATED APPLIANCES INCLUDING HEAT A/C UNIT, REFRIGERATOR, MICROWAVE AND ELECTRIC RANGE.

E25. BATHROOM RECEPTACLE 20A BRANCH CIRCUIT HAS BEEN PROVIDED PER NEC 210.11 (C)(3) SERVING ONLY BATHROOM RECEPTACLES.

E26. RECEPTACLE OUTLETS HAVE BEEN INSTALLED IN ACCORDANCE WITH NEC 210.52. ALL RECEPTACLES SHALL BE LISTED AND GROUNDED TYPE AND INSTALLED IN ACCORDANCE WITH NEC 406.4. ALL RECEPTACLES SHALL BE PROVIDED WITH AFCI PROTECTION. ALL 15A AND 20A KITCHEN, BATHROOM, LAUNDRY, AND OUTDOOR RECEPTACLES SHALL BE GFCI TYPE. ALL OUTDOOR RECEPTACLES SHALL BE WEATHER RESISTANT TYPE WITH WEATHERPROOF COVERS AND WEATHER SEALED TO BUILDING FRAME. ALL RECEPTACLES SHALL BE TAMPER RESISTANT TYPE PER NEC 406.12.

E27. PROVIDE GROUNDING AND BONDING SHALL BE PROVIDED PER NEC 250.

E28. FITTINGS AND CONNECTORS THAT ARE INTENDED TO BE CONCEALED AT THE TIME OF ASSEMBLY SHALL BE LISTED AND IDENTIFIED FOR THE INTERCONNECTION OF BUILDING COMPONENTS. SUCH FITTING SHALL BE EQUAL TO THE WIRING METHOD EMPLOYED IN INSULATION, TEMPERATURE RISE, AND FAULT-CURRENT WITHSTANDING AND SHALL BE CAPABLE OF ENDURING THE VIBRATION AND SHOCK OCCURRING IN TRANSPORT.

E29. GROUNDING OF BOTH ELECTRICAL AND NON ELECTRICAL METAL PARTS SHALL BE THROUGH CONNECTION TO A GROUNDING BUS IN THE PANEL/LOAD CENTER AND SHALL BE CONNECTED THROUGH THE GREEN-COLORED INSULATED CONDUCTOR IN THE FEEDER WIRING TO THE GROUNDING BUS IN THE SERVICE ENTRANCE EQUIPMENT.

E30. THE INSTALLATION OF THE SERVICE EQUIPMENT SHALL COMPLY WITH ARTICLE 230. MEANS SHALL BE PROVIDED FOR THE CONNECTION OF A GROUNDING ELECTRODE CONDUCTOR TO THE SERVICE EQUIPMENT AND ROUTING IT OUTSIDE THE STRUCTURE. BONDING AND GROUNDING OF THE SERVICE SHALL BE IN ACCORDANCE WITH ARTICLE 250. THE MANUFACTURER SHALL INCLUDE IN ITS WRITTEN INSTALLATION INSTRUCTIONS ONE METHOD OF GROUNDING THE SERVICE EQUIPMENT AT THE INSTALLATION SITE. THE INSTRUCTIONS SHALL CLEARLY STATE THAT OTHER METHODS OF GROUNDING ARE FOUND IN ARTICLE 250.
THE MINIMUM SIZE GROUNDING ELECTRODE CONDUCTOR SHALL BE # 8 AWG COPPER.

A WARNING LABEL SHALL BE MOUNTED ON OR ADJACENT TO THE SERVICE EQUIPMENT. THE LABEL SHALL STATE THE FOLLOWING:
"WARNING DO NOT PROVIDE ELECTRICAL POWER UNTIL THE GROUNDING ELECTRODE(S) IS INSTALLED AND CONNECTED (SEE INSTALLATION INSTRUCTIONS)."

WHERE THE SERVICE EQUIPMENT IS NOT INSTALLED IN OR ON THE UNIT, THE INSTALLATION SHALL COMPLY WITH THE OTHER PROVISIONS OF THE NEC.

NOTES:

G1. CONTRACTOR SHALL OBTAIN APPROVAL FROM LOCAL CODE AUTHORITIES BEFORE INSTALLING GROUNDING.

G2. CONCRETE ENCASED ELECTRODE ENCASED BY A MINIMUM OF 2" OF CONCRETE ON ALL SIDES LOCATED WITHIN AND NEAR THE BOTTOM OF A CONCRETE FOOTING OR FOUNDATION. ELECTRODE SHALL CONSIST OF A MINIMUM OF 20' OF BARE COPPER CONDUCTOR (# 4) WHERE APPLICABLE. (SEE NEC 250.52 (A) (3) (2))

G3. BOND TO REBAR STUBOUT IN FOUNDATION PER NEC 250 WHERE APPLICABLE (SEE NEC 250.52 (A) (3) (1))

SYMBOL LIST

SYMBOL	DESCRIPTION
J, J	JUNCTION BOX - WALL OR CEILING MOUNTED
	NON - FUSED DISCONNECT SWITCH
	FUSED DISCONNECT SWITCH
	MOTOR CONNECTION - H.P. AS NOTED ON DRAWINGS
	NM-B CABLE RUN CONCEALED IN CEILING OR WALLS. X DENOTES GROUND WIRE DENOTES NEUTRAL CONDUCTOR DENOTES HOT CONDUCTOR
	LOAD CENTER
	DUPLEX RECEPTACLE (NEMA 5-20R) (+18" AFF UNLESS NOTED OTHERWISE)
	DUPLEX RECEPTACLE (NEMA 5-20R) (MOUNTED 6" ABOVE COUNTER TOP UNLESS NOTED OTHERWISE)
	DUPLEX CONVENIENCE OUTLET (NEMA 5-15R)
	SPECIAL OUTLET. REFER TO POWER PLAN ON SHEET E1.0 FOR REQUIREMENTS
	SINGLE NEMA 5-20R RECEPTACLE
SD	CEILING MOUNTED SMOKE ALARM
A.	DENOTES AMPERES
A.C.	DENOTES ABOVE COUNTER
A.F.F.	DENOTES ABOVE FINISHED FLOOR
AFCI	DENOTES ARC FAULT CIRCUIT INTERRUPTER
AFGCI	DENOTES ARC FAULT/GROUND FAULT COMBINATION CIRCUIT INTERRUPTER
C.	DENOTES CONDUIT
GFCI	DENOTES GROUND FAULT CIRCUIT INTERRUPTER
GRD.	DENOTES GROUND
M.L.O.	DENOTES MAIN LUGS ONLY
WP	DENOTES WEATHERPROOF (NEMA 3R)

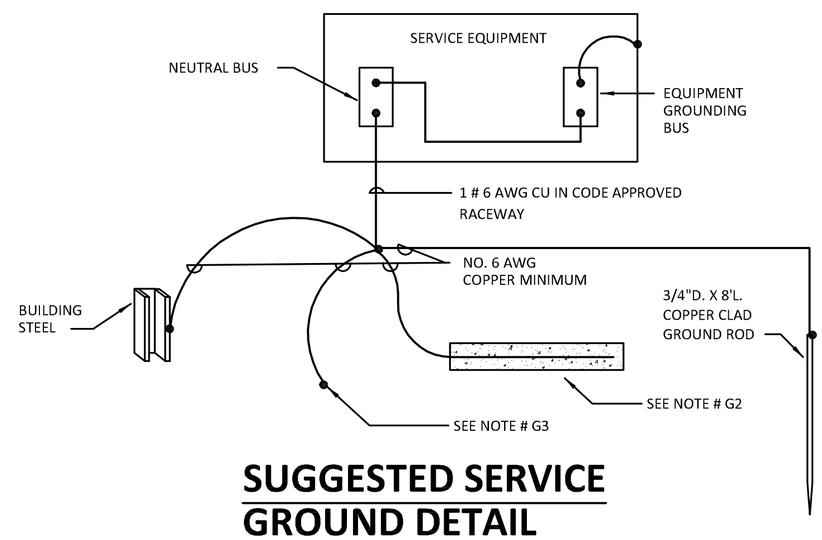

SUGGESTED SERVICE GROUND DETAIL

NO SCALE

DATE:	REV:	DESCRIPTION:

BOXABL INC.

5345 EAST NORTH BELT ROAD
NORTH LAS VEGAS, NV 89115, USA

+1(702) 500-9000 HELLO@BOXABL.COM

MODEL: 2 DOOR CASITA
BXB-000009

SHEET: E1.0

BOXABL

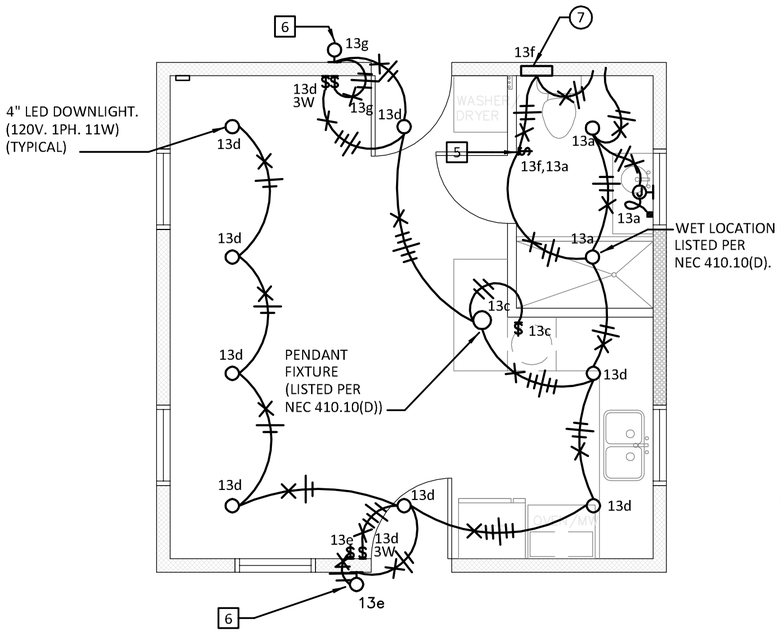

LIGHTING PLAN

SCALE: 1/4"=1'-0"

0' 4' 8' 12' 16'

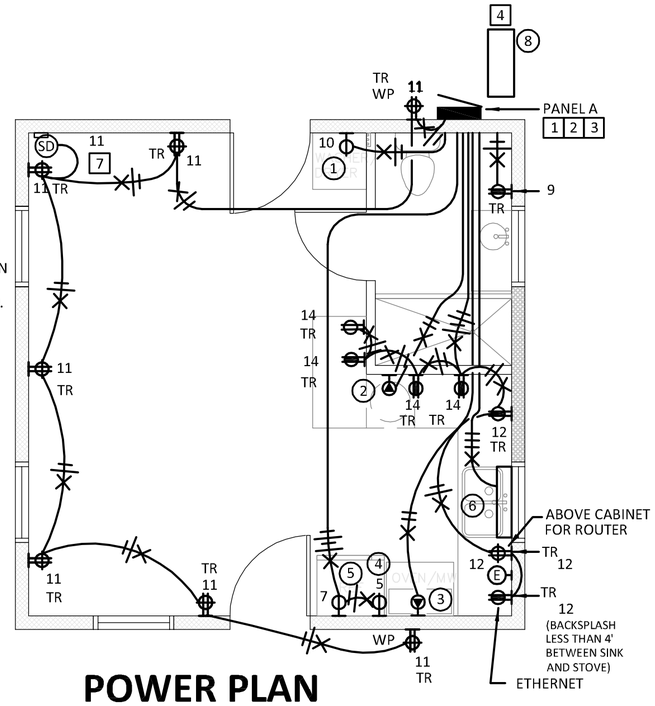

POWER PLAN

SCALE: 1/4"=1'-0"

0' 4' 8' 12' 16'

POWER NOTES:

1. LOAD CENTER FULLY ASSEMBLED AND INSTALLED IN FACTORY WITH EMERGENCY SERVICE/ MAIN SERVICE DISCONNECT AS PART OF LOAD CENTER.
2. ELECTRICIAN TO PROVIDE ELECTRICAL FEEDER/ELECTRICAL SERVICE FROM SITE TO LOAD CENTER.
3. ELECTRICIAN TO PROVIDE SERVICE GROUND/BUILDING GROUND PER NEC REQUIREMENTS.
4. ELECTRICIAN TO WIRE OUTDOOR CONDENSER UNIT EXTEND WIRING AND INTERCONNECT WIRING FROM INDOOR FAN COIL PER MANUFACTURERS DIRECTIONS. COORDINATE INSTALLATION WITH MECHANICAL CONTRACTOR AS TO NOT IMPEDE CODE REQUIRED CLEARANCE FOR ELECTRICAL PANELS/SERVICE DISCONNECTS. PROVIDE GFCI PROTECTION PER 210.8 (F).
5. PROVIDE COMBO BATH FAN/LIGHT SWITCH WITH VENTILATION CONTROL & DELAY TIMER. (LEGRAND RADIANT 4 BUTTON DIGITAL TIMER # RT2BKCCV4 OR EQUAL)
6. OUTDOOR WALL LAMP WITH INTEGRAL PHOTOCELL OR WITH ASTRONOMICAL TIMECLOCK (FURNISHED WITH UNIT INSTALLED ON SITE)
7. COMBINATION SMOKE/FIRE/CARBON MONOXIDE ALARM WITH BATTERY BACKUP. UNIVERSAL SECURITY INSTRUMENTS # MIC1509S HARDWIRED 3 IN 1 SMART ALARM WITH 10 YEAR SEALED BATTERY OR EQUAL. DETECTOR SHALL BE LOCATED MINIMUM OF 20 FEET FROM COOKING APPLIANCE. SHIPPED LOOSE, INSTALLED AND TESTED ONSITE.

CIRCUIT PROTECTION NOTES:

- ARC FAULT CIRCUIT INTERRUPTER PROTECTION SHALL BE PROVIDED FOR ALL 15 AND 20A BRANCH CIRCUITS SUPPLYING OUTLETS AND DEVICES IN ACCORDANCE WITH NEC 210.12(A).
- GROUND FAULT CIRCUIT INTERRUPTER PROTECTION SHALL BE PROVIDED FOR ALL 15A AND 20A RECEPTACLES AND EQUIPMENT IN ACCORDANCE WITH NEC 210.8.

TR ADJACENT TO RECEPTACLE INDICATES TAMPER RESISTANT.

ALL 15A AND 20A RECEPTACLES SHALL BE TAMPER RESISTANT TYPE PER CEC 406.12 TAMPER-RESISTANT RECEPTACLES. ALL 15- AND 20-AMPERE, 125- AND 250-VOLT NONLOCKING-TYPE RECEPTACLES IN THE AREAS SPECIFIED IN 406.12(1) THROUGH (7) SHALL BE LISTED TAMPER-RESISTANT RECEPTACLES.
(1) DWELLING UNITS IN ALL AREAS SPECIFIED IN 210.52

Casita BXB-000009

PANEL DESIGNATION	A								
TOTAL AREA (SQ FT)	361		SERVICE	120/240V., 1PH., 3W.					
GENERAL LIGHTING LOAD CALC	AREA	361	X			3	WT/SQ FT WT/SQ FT	1083	W GEN. LTG/REC
SMALL APPLIANCE		2	X	1	QTY OF UNITS	X	1500 WATTS	3000	W SM. APP.
LAUNDRY		1	X	1	QTY OF UNITS	X	1500 WATTS	1500	W LAUNDRY
					SUBTOTAL			5583	
DEMAND									
1ST 20 KW		AT	100%		5583		=	5,583	
NEXT 120 KW		AT	35%		0	ACTUAL	=	0	
REMAINING KW		AT	25%		0	ACTUAL	=	0	
WATER HEATER					4500	X	100% =	4,500	
DISHWASHER					0	X	100% =	0	
MISC					MISC	X	100% =	0	
MISC					0	X	100% =	0	
FAN COIL					240	X	100% =	240	
AC					2400	X	100% =	2,400	
ELECTRIC DRYER					0	X	100% =	0	
ELECTRIC RANGE					9600	X	80% =	7,680	
LARGEST MOTOR					0	X	25% =	0	
TOTAL DEMAND:								20,403	WATTS
VOLTAGE:	240		1	PHASE				20	KW
AMPS:	85.0								
MINIMUM SERVICE SIZE:		85	AMPS						
SERVICE SIZE:		100	AMPS						

EQUIPMENT SCHEDULE

MARK	EQUIPMENT DESCRIPTION	VOLTAGE	PHASE	AMPS	RECEPTACLE TYPE	CIRCUIT DATA: CIRCUIT NUMBER	CONDUCTORS QTY.	CONDUCTORS SIZE	CONDUCTORS EQ. GND.		HEIGHT
1	WASHER DRYER	120	1	10.0	5-20R	A-10	2	#12	#12		18" A.F.F.
2	WATER HEATER	240	1	18.75	6-30R	A-(6,8)	2	# 10	#10		18" A.F.F.
3	RANGE	240	1	40.0	14-50R*	A-(2,4)	2	#6	#10		18" A.F.F.
4	REFRIGERATOR	120	1	12	5-20R	A-5	2	#12	#12		18" A.F.F.
5	MICROWAVE	120	1	12	5-20R	A-7	2	#12	#12		84" A.F.F.
6	FAN COIL UNIT FCU-1	240	1	1.0	-	WIRE TO CU-1	3	#14	#14		-
7	EXHAUST FAN EF-1	120	1	11 WATTS	-	A-13f	2	#12	#12		-
8	OUTDOOR CONDENSER CU-1	240	1	15.0	-	A-(15,17)	2	#10	#10		-

*14-50R IS A THREE PHASE RECEPTACLE ONLY TWO PHASES USED. COORDINATE PHASING.

PANEL DATA SCHEDULE

PANEL NAME: _A_

LOCATION OUTDOOR
SERVICE 120/240V.,1PH.,3W.
MAIN BREAKER 100A-2P MINIMUM
MAIN LUGS ONLY
NEUTRAL BUS 100A MINIMUM
GROUND BUS YES
SHORT CIRCUIT RATING 10,000 RMS SYM AMPS

	CONNECTED LOAD		DEMAND LOAD	
PHASE A	12.94	KVA	10.62	KVA
PHASE B	12.45	KVA	10.20	KVA
TOTAL	25.39	KVA	20.82	KVA
	106	AMPS	87	AMPS

DEMAND LOAD

KEY: L: LIGHTING	0.19	KVA
R: RECEPTACLES	5.63	KVA
M: MOTORS	6.90	KVA
P: PANELS	0.00	KVA
T: TRANSFORMERS	0.00	KVA
E: EQUIPMENT	8.10	KVA
S & X: SPARE & SPACE	0.00	KVA

FLUSH ☐
SURFACE ■

NOTES: NEMA 3R – SERVICE ENTRANCE RATED – MINIMUM OF 3 # 2 AWG SERVICE
* DENOTES LOCK-OUT CLIP: ** DENOTES GFI BREAKER: *** DENOTES VIA TIMECLOCK: **** DENOTES VIA CONTACTOR

CIRCUIT USE	CONNECTED LOAD A	CONNECTED LOAD B	CCT. NO.	CIRCUIT BREAKER	CIRCUIT BREAKER	CCT. NO.	CONNECTED LOAD A	CONNECTED LOAD B	CIRCUIT USE
R: INTEGRAL WHOLE BUILDING	0		1	20A–2P	50A–2P	2	4,800		E: RANGE
R: SURGE PROTECTION DEVICE		0	3	SPD		4		4,800	E:
R: REFRIGERATOR	1,440		5	20A–1P AFGCI	30A–2P	6	2,250		M: WATER HEATER
R: MICROWAVE		1,440	7	20A–1P AFGCI		8		2,250	M:
R: BATHROOM RECEPTACLE	360		9	20A–1P AFGCI	20A–1P AFGCI	10	1,200		E: WASHER/DRYER
R: LIVING ROOM/EXTERIOR RECEPTS.		1,260	11	20A–1P AFGCI	20A–1P AFGCI	12		1,500	R: ROUTER/KITCHEN SMALL APPL.
L: BATH/KITCHEN/LIVING ROOM LTS	192		13	15A–1P AFCI	20A–1P AFGCI	14	1,500		R: DINING/KITCHEN SMALL APPL.
M: CU–1/FCU–1		1,200	15	30A–2P	BLANKSPACE	16		0	X: BLANKSPACE
M:	1,200		17		BLANKSPACE	18	0		X: BLANKSPACE
X: BLANKSPACE		0	19	BLANKSPACE	BLANKSPACE	20		0	X: BLANKSPACE
SUB TOTAL	3,192	3,900					9,750	8,550	SUB TOTAL

DATE:	REV:	DESCRIPTION:

BOXABL INC.

5345 EAST NORTH BELT ROAD
NORTH LAS VEGAS, NV 89115, USA

+1(702) 500-9000 HELLO@BOXABL.COM

MODEL: 2 DOOR CASITA
BXB-000009

SHEET: E2.0

BOXABL

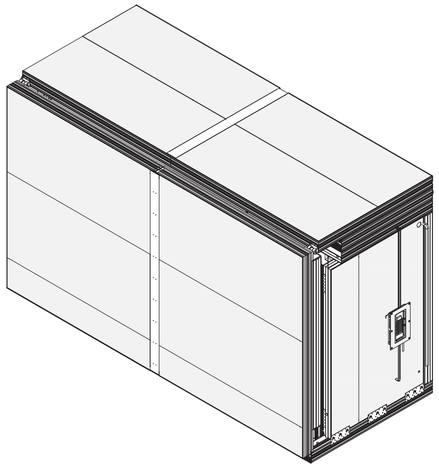

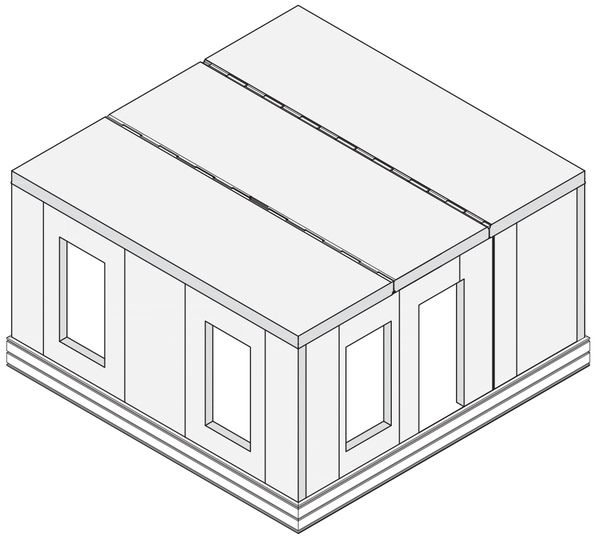

2-Door Studio Casita

Model # BXB-000002

CUSTOMER INFORMATION

WIND, SNOW, & SEISMIC LIMITS, ACCESSORIES,
GENERAL CONSTRUCTION INFO.,
FOUNDATION OPTIONS & OPTIONAL HIGH-PITCH ROOFS
(NOT TO BE USED FOR PERMIT SUBMITTAL)

LIMITATIONS: WIND[2] - SNOW - SEISMIC[4]

SEE FOOTNOTE 5 FOR DETERMINATION OF WIND LOADS, SNOW LOADS & SEISMIC FACTORS AT SITE OF INSTALLATION	LOW-PITCH (1/2 : 12) ROOFS		HIGH PITCH ROOFS GABLE (3:12, 6:12, 9:12), MONOSLOPE (3:12), HIP (3:12)
WIND EXPOSURE[1]	B	C	SITE-SPECIFIC EVALUATION REQ'D
MAX. ALLOWED[4] WIND SPEED	140 mph	120 mph	
MAXIMUM ALLOWED GROUND SNOW LOAD (Pg)	40 psf[3]		
MAXIMUM ALLOWED SEISMIC S_{MS}	3.30 3.1 IF STUCCO USED		SITE-SPECIFIC EVALUATION REQ'D
MAXIMUM ALLOWED SEISMIC S_S	2.75 2.58 IF STUCCO USED		SITE-SPECIFIC EVALUATION REQ'D

1 EXPOSURE B IS URBAN AND SUBURBAN AREAS, WOODED AREAS, OR OTHER TERRAIN w/ NUMEROUS,CLOSELY SPACED OBSTRUCTIONS THAT HAVE A SIZE OF A SINGLE-FAMILY DWELLING THESE CONDITIONS PREVAIL IN THE UPWIND DIRECTION FOR A DISTANCE GREATER THAN 1,500 FT.

EXPOSURE C IS OPEN TERRAIN w/ SCATTERED OBSTRUCTIONS THAT HAVE HEIGHTS GENERALLY LESS THAN 30 FT. THIS INCLUDES FLAT, OPEN COUNTRY AND GRASSLANDS.

EXPOSURE D (NOT ALLOWED) IS FLAT, UNOBSTRUCTED AREAS (MUD FLATS, SALT FLATS) AND WATER SURFACES. THESE CONDITIONS PREVAIL IN THE UPWIND DIRECTION FOR A DISTANCE > 5,000 FT. THIS EXPOSURE ALSO APPLIES WHERE EXPOSURE B OR C OCCURS WITHIN THE FIRST 600 FT OF THE SITE.

2 CASITAS LOCATED ON HILLS OR WITHIN 1,000 FT OF AN ESCARPMENT WILL REQUIRE SPECIAL EVALUATION BY THE STRUCTURAL ENGINEER.

3 IF LOCATED TIGHT IN AMONG CONIFER TREES MULTIPLY LOAD BY 0.83

4 BASIC (ULTIMATE) WIND SPEED AS DEFINED BY THE INTERNATIONAL BUILDING CODE.

5 FIND WIND SPEED, GROUND SNOW LOAD, SEISMIC CATEGORY & SEISMIC Sms & Ss VALUES AT *ASCEHAZARDTOOL.ORG* USING ASCE/SEI 7-16, RISK CATEGORY II, ASSUMED SOIL CLASS "D". VERIFY BASIC (ULTIMATE) WIND AND GROUND SNOW LOAD VALUES WITH THE LOCAL OR COUNTY BUILDING DEPARTMENT. INSTALLER IS RESPONSIBLE FOR VERIFYING THE WIND, SNOW & SEISMIC FACTORS ARE WITHIN THE ALLOWABLE LIMITS IN TABLE ABOVE.

THESE DRAWINGS SHALL NOT BE USED FOR SITE-SPECIFIC INSTALLATION OR SUBMITTED TO ANY BUILDING DEPARTMENT FOR PERMIT.

VERIFICATION IS REQUIRED THAT WIND, SNOW AND SEISMIC CONDITIONS ARE WITHIN ALLOWABLE LIMITS AS WELL AS INVESTIGATION FOR CORROSIVE SOIL , SOIL SUBJECT TO LIQUIFACTION POTENTIAL, COLLAPSIBLE SOIL, EXPANSIVE SOIL CONDITIONS. OR SITES WITHIN A FLOOD HAZARD ZONE - EACH OF WHICH IS REQUIRES A CUSTOM, SITE-SPECIFIC ENGINEERED FOUNDATION DESIGN

FOUNDATIONS :

FOUNDATIONS SHOULD NOT BE LOCATED IN AREAS WHERE SOIL IS SUBJECT TO EXPANSION, CORROSION, LIQUIFACTION OR COLLAPSE.

DESIGN CRITERIA:

CODE: PER LOCAL REQ'TS

APPLIED LOADS

ROOF LIVE LOAD : 20 psf

SNOW LOAD : SEE TABLE AT LEFT

ROOF DEAD LOAD :

SIP ROOF: 4 psf + 3 psf ALLOTTED FOR SITE INSTALLED EPDM.

FOR HIGH-PITCHED ROOFS THE ADDITIONAL WEIGHT VARIES.

FLOOR LIVE LOAD : 40 psf FLOOR DEAD LOAD: 5 psf

BASIC WIND SPEED : SEE LIMITS IN TABLE AT LEFT.
(ASD) $q_h = q_z = 16.0$ psf (MAX)
ASCE7-16 26.10.2

SEISMIC FACTORS:

I = 1 SEE TABLE AT LEFT FOR Sms & Ss LIMITS

SITE CLASS = D (default) Fa = 1.2 (MINIMUM)

SEISMIC DESIGN CATEGORY = D (MAX. ALLOWED).

BASIC SEISMIC FORCE RESISTING SYSTEM
= LIGHT-FRAMED WALLS w/ SHEAR PANELS OF MGO & STEEL

R = 6.5 PER ICC-ESR #4725

ANALYSIS PROCEDURE: *EQUIV. LATERAL FORCE*

DATE:	REV:	DESCRIPTION:

SIP ENGINEERING CONSULTANTS, LLC
14845 SW MURRAY SCHOLLS DR.
SUITE 110 PMB 306
BEAVERTON, OR 97007
PHONE : 503-564-4178
www.SIPconsultants.com

UNITS:	FT-IN
SHEET FORMAT:	ARCH C
SHEET SCALE:	NONE
CREATED BY:	MN
RELEASE DATE:	4/16/2025
SHEET:	1

MODEL: 2 DOOR CASITA

MODEL #: BXB-000009

CLIENT: BOXABL INC.
5345 EAST NORTH BELT ROAD
NORTH LAS VEGAS, NV 89115, USA
+1(702) 500-9000 HELLO@BOXABL.COM

BOXABL

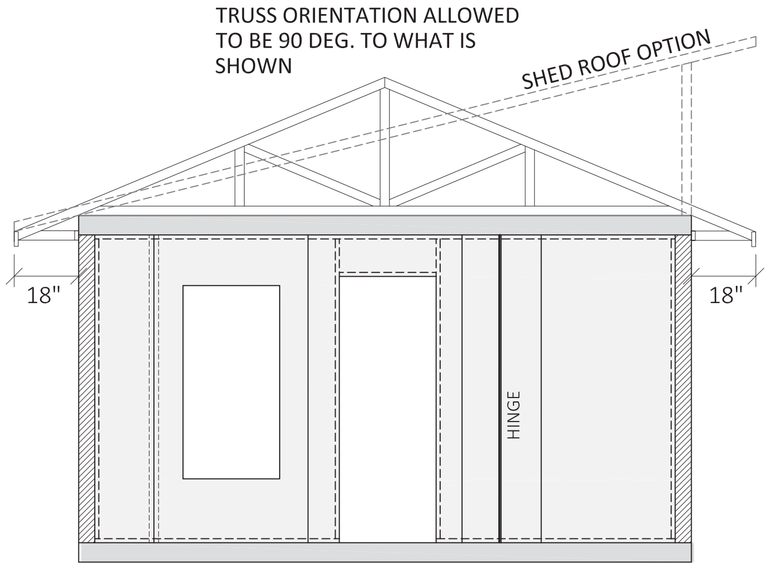

FRONT DOOR SIDE

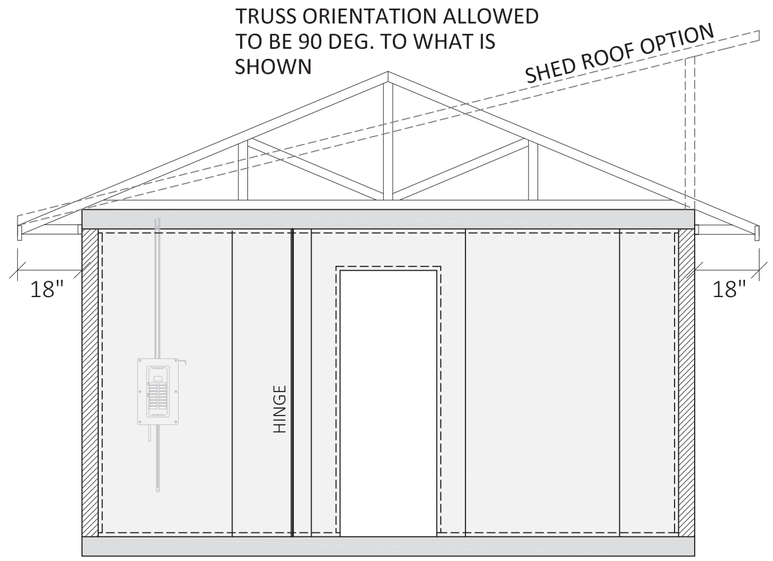

BACK SIDE

HIGH-PITCHED ROOFS

USING PRE-ENGINEERED
ROOF TRUSSES
SEE SHEETS 8 - 10
(REQ'D FOR SNOW LOADS
EXCEEDING THE LOW PITCH ROOF
LIMIT SPECIFIED ON SHEET 1)

ALLOWABLE ACCESSORY OPTIONS

(DESIGNED BY OTHERS)

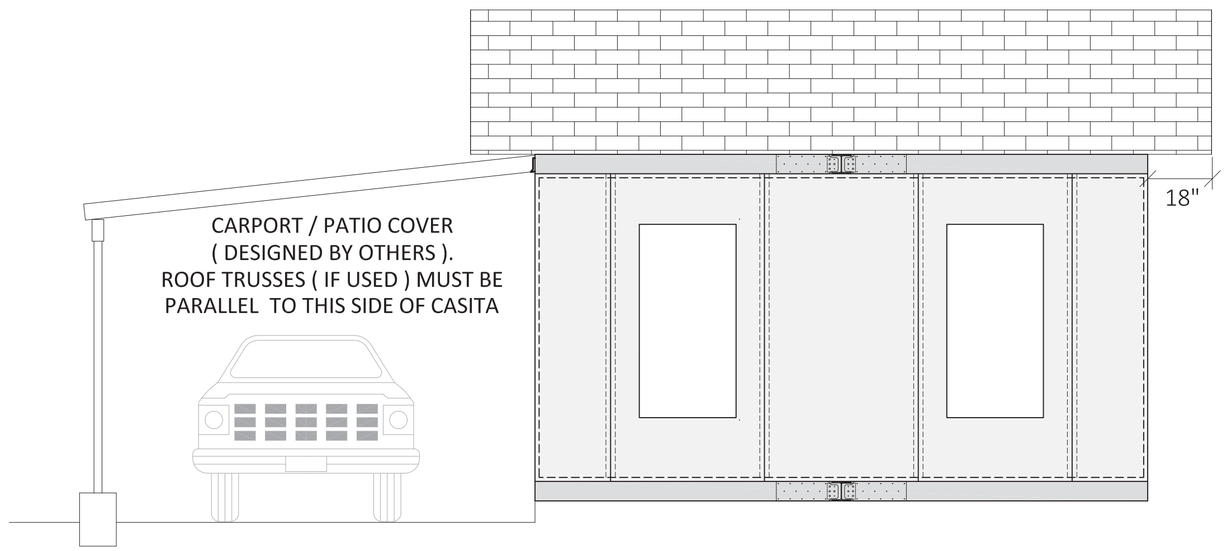

LEFT SIDE

SEE ARCHITECTURAL DRAWINGS FOR ADD'L INFORMATION

DATE:	REV:	DESCRIPTION:

HIGH-PITCH ROOF, CARPORT, & PATIO COVER OPTIONS

UNITS:	FT-IN
SHEET FORMAT:	ARCH C
SHEET SCALE:	NONE
CREATED BY:	MN
RELEASE DATE:	10/28/2024
SHEET:	2

MODEL: 2 DOOR CASITA

MODEL #: BXB-000009

BOXABL INC.
5345 EAST NORTH BELT ROAD
NORTH LAS VEGAS, NV 89115, USA
+1(702) 500-9000 HELLO@BOXABL.COM

BOXABL

OPTIONAL
HARDI® ARCHITECTURAL PANELS

1) ATTACH 5/16" PLYWOOD LAYER TO WALL PER DESIGN BY A STRUCTURAL ENGINEER.

2) ATTACH TO WALL PER DESIGN BY A STRUCTURAL ENGINEER.

3) WHEN GABLE ROOF TRUSSES ARE USED, FASTEN TO GABLE END SHEATHING WHERE EACH TRUSS WEB OCCURS & AT PANEL EDGES PER DESIGN BY A STRUCTURAL ENGINEER.

4) FASTENERS MUST HAVE ½" MIN. EDGE DISTANCE & MIN. CLEARANCE OF 2" FROM CORNERS. FASTENERS SHOUD BE CORROSION RESISTANT, GALVANIZED, OR STAINLESS STEEL. STAINLESS STEEL IS PARTICULARLY IMPORTANT FOR LOCATIONS NEAR THE OCEAN, LARGE LAKE, OR IN VERY HUMID CLIMATES.

5) VERTICAL JOINTS MUST BE SEALED WITH CAULKING, COVERED WITH BATTENS. HORIZONTAL JOINTS, AS REQUIRED WHEN AT GABLE END TRUSS CONDITIONS, MUST BE FLASHED w/ Z-FLASHING.

6) BOXABL ASSUMES NO RESPONSIBILITY FOR WATER INFILTRATION, OR OTHER POTENTIALLY ADVERSE CONSEQUENCES FROM THE USE OF THIS PRODUCT.

7) SEE ARCHITECTURAL DRAWINGS & MANUFACTURER'S LITERATURE FOR MORE INFO.

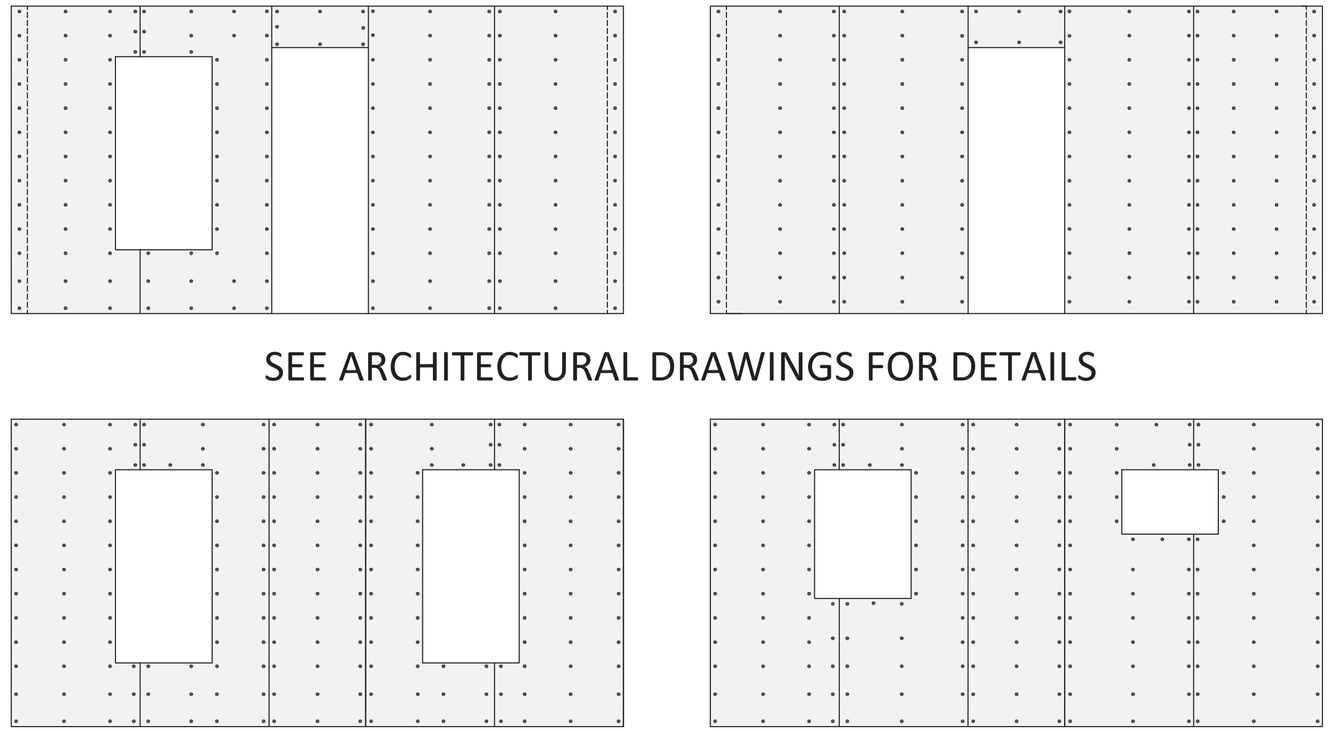

SEE ARCHITECTURAL DRAWINGS FOR DETAILS

SEE NOTE 1) FOR PLYWOOD BASE LAYER REQUIREMENT BEHIND THE HARDI® PANELS

OPTIONAL
ONE-COAT STUCCO
(MAX. WT = 5 psf)

1) ATTACH 5/16" PLYWOOD LAYER TO WALL PER DESIGN BY A STRUCTURAL ENGINEER.

2) ATTACH LATH OVER PAPER BACKING TO WALL PER DESIGN BY A STRUCTURAL ENGINEER.

3) WHEN GABLE ROOF TRUSSES ARE USED, FASTEN TO GABLE END SHEATHING PER DESIGN BY A STRUCTURAL ENGINEER.

4) FASTENERS SHOUD BE CORROSION RESISTANT, GALVANIZED, OR STAINLESS STEEL. STAINLESS STEEL IS PARTICULARLY IMPORTANT FOR LOCATIONS NEAR THE OCEAN, LARGE LAKE, OR IN VERY HUMID CLIMATES.

5) STUCCO TO BE INSTALLED PER RECOMMENDATION OF THE MANUFACTURER, THE STUCCO MANUFACTURER'S RECOMMENDATIONS, ASTM C1063, ASTM C926, ASTM C1861 AND PER THE ARCHITECTURAL DRAWING DETAILS.

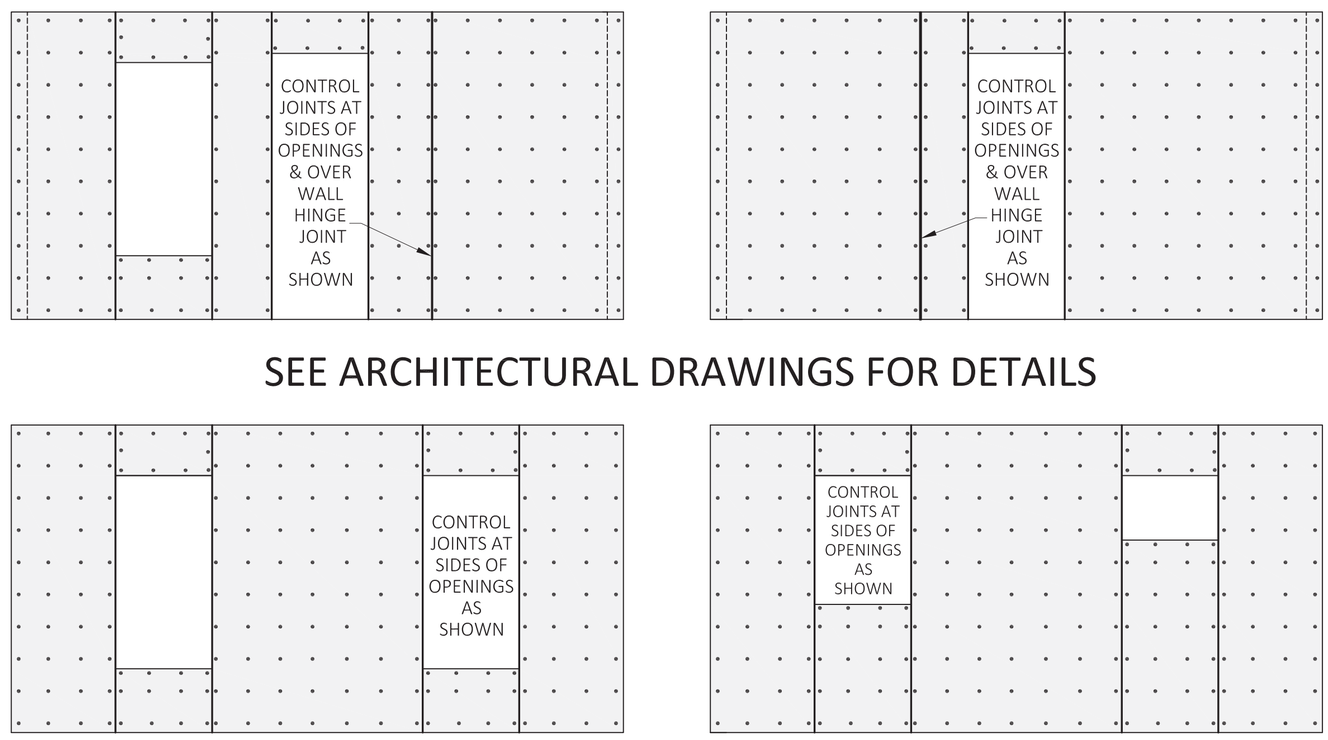

SEE ARCHITECTURAL DRAWINGS FOR DETAILS

SEE NOTE 1) FOR PLYWOOD BASE LAYER REQUIREMENT BEHIND THE STUCCO

DATE:	REV:	DESCRIPTION:

WALL CLADDING OPTIONS

UNITS:	FT-IN
SHEET FORMAT:	ARCH C
SHEET SCALE:	NONE
CREATED BY:	
RELEASE DATE:	10/28/2024
SHEET:	3

MODEL: 2 DOOR CASITA

MODEL #: BXB-000009

BOXABL INC.
5345 EAST NORTH BELT ROAD
NORTH LAS VEGAS, NV 89115, USA
+1(702) 500-9000 HELLO@BOXABL.COM

BOXABL

OPTIONAL
HARDI PLANKS

1) ATTACH 5/16" PLYWOOD LAYER TO WALL w/ #8 BUGLE HEAD SHEET METAL SCREWS PER DESIGN BY A STRUCTURAL ENGINEER.

2) ATTACH HARDI® PLANKS TO WALL PER DESIGN BY A STRUCTURAL ENGINEER.

3) FASTENERS MUST HAVE ½" MIN. EDGE DISTANCE & MIN. CLEARANCE OF 2" FROM CORNERS. FASTENERS SHOUD BE CORROSION RESISTANT, GALVANIZED, OR STAINLESS STEEL. STAINLESS STEEL IS PARTICULARLY IMPORTANT FOR LOCATIONS NEAR THE OCEAN, LARGE LAKE, OR IN VERY HUMID CLIMATES.

4) SEE ARCHITECTURAL DRAWINGS AND MANUFACTURER'S LITERATURE FOR MORE INFO.

SEE NOTE 1) FOR PLYWOOD BASE LAYER REQUIREMENT BEHIND THE HARDI® PLANKS

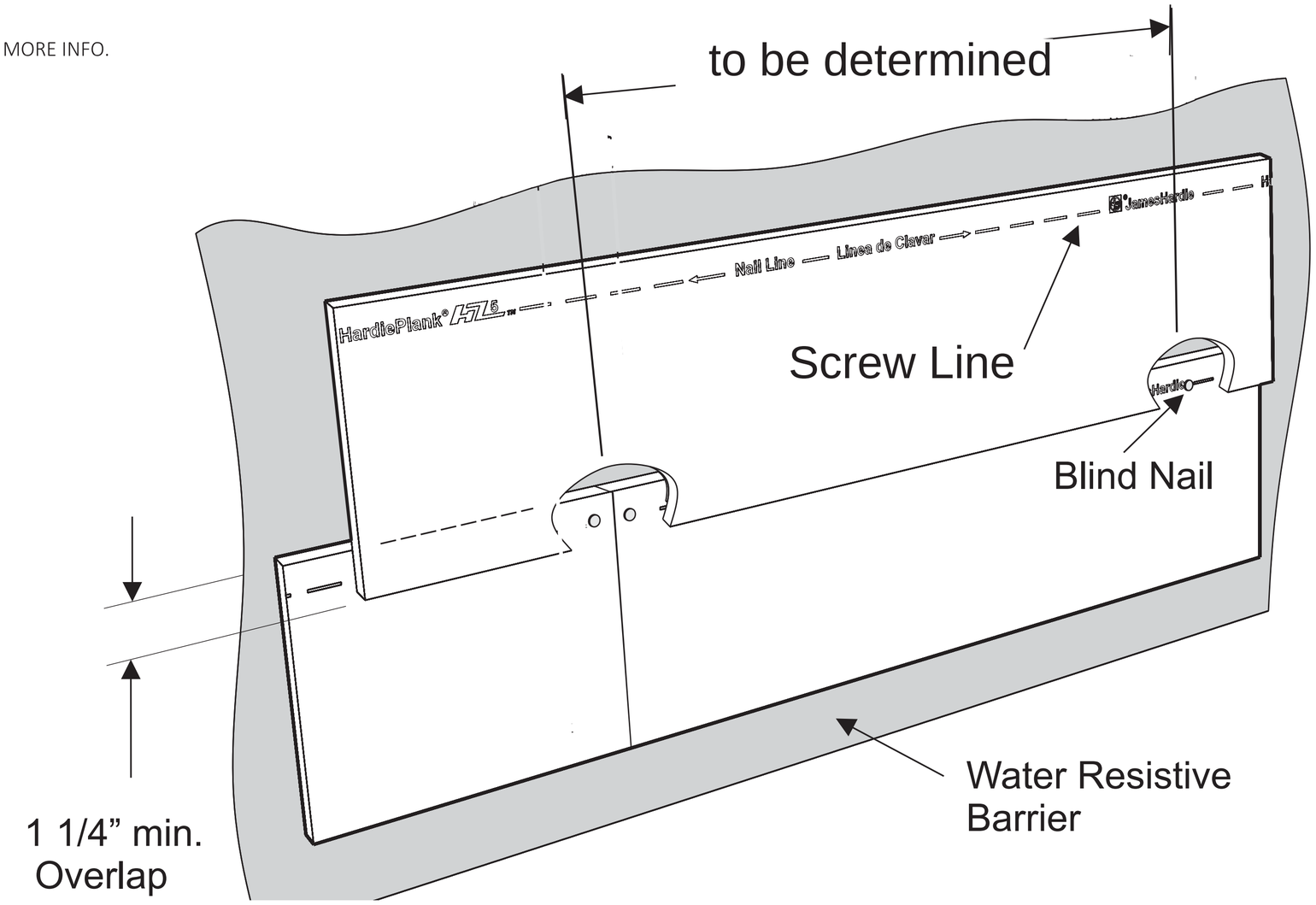

DATE:	REV:	DESCRIPTION:

WALL CLADDING OPTIONS

UNITS:	FT-IN
SHEET FORMAT:	ARCH C
SHEET SCALE:	NONE
CREATED BY:	
RELEASE DATE:	10/28/2024
SHEET:	4

MODEL: 2 DOOR CASITA

MODEL #: BXB-000009

BOXABL INC.
5345 EAST NORTH BELT ROAD
NORTH LAS VEGAS, NV 89115, USA
+1(702) 500-9000 HELLO@BOXABL.COM

BOXABL

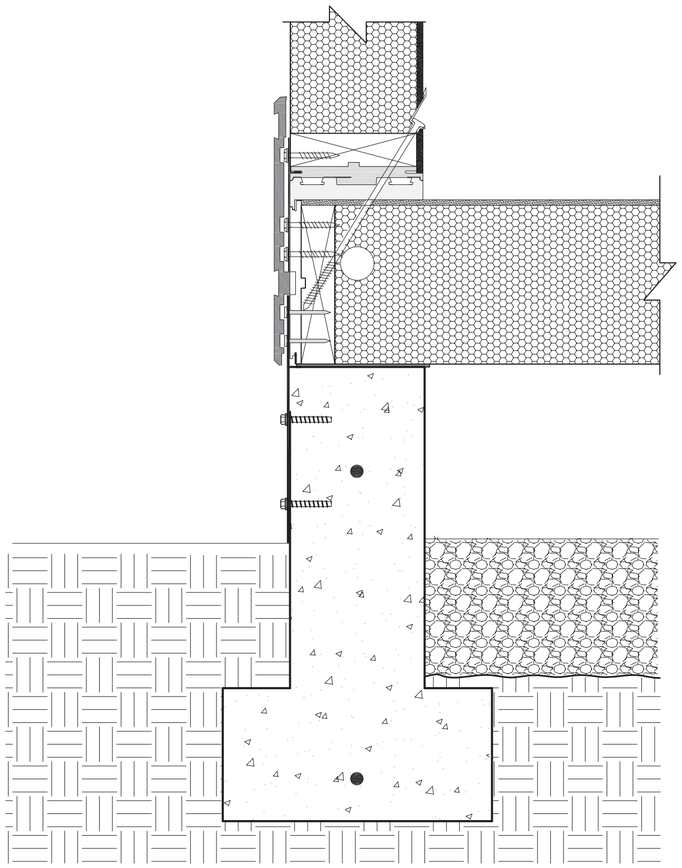

A PERIMETER FLOOR EDGE

SCALE: NONE

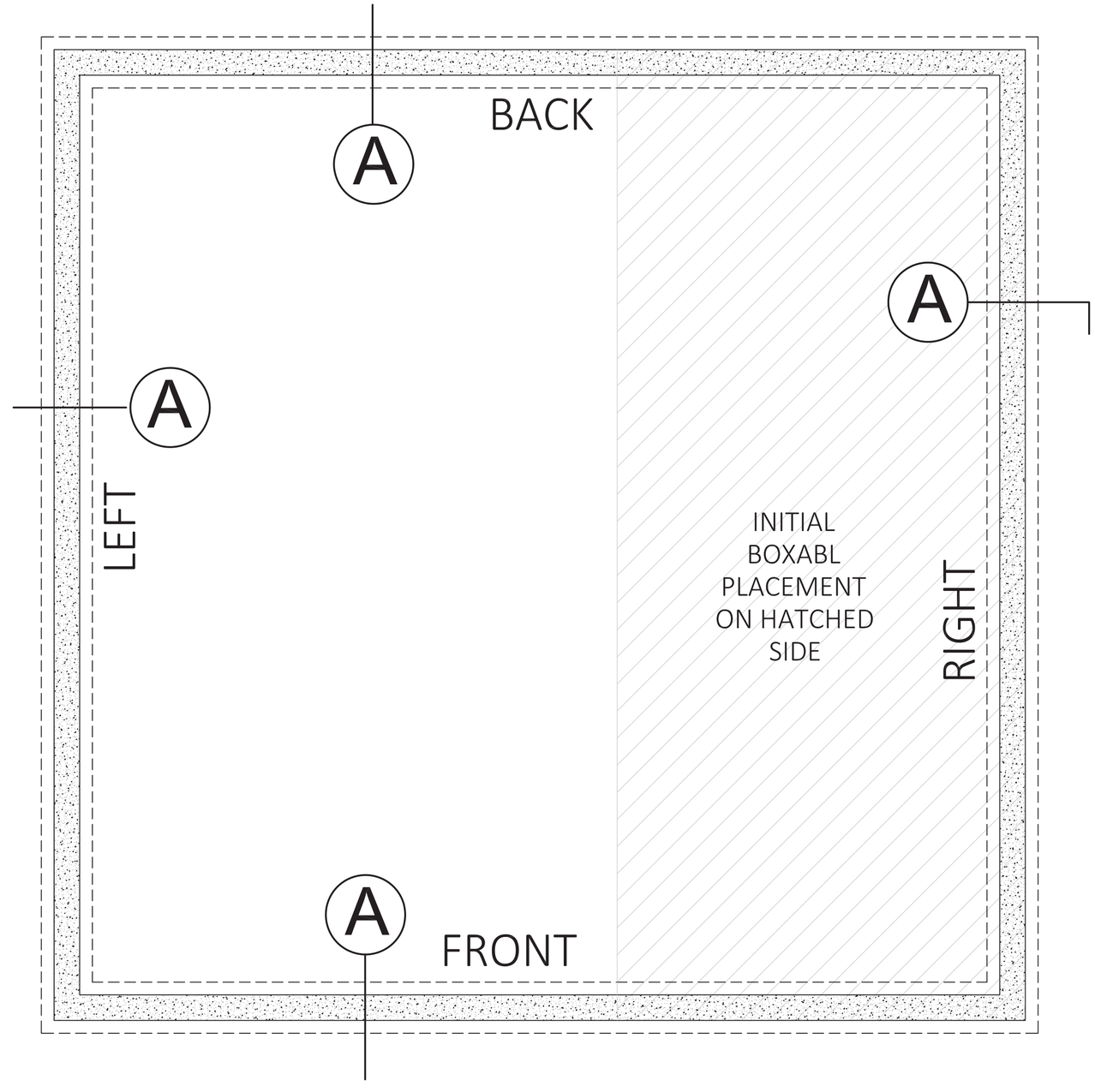

STEMWALL FOUNDATION PLAN

DATE:	REV:	DESCRIPTION:

CONCRETE STEMWALL FOUNDATION

UNITS:	FT-IN
SHEET FORMAT:	ARCH C
SHEET SCALE:	NONE
CREATED BY:	MN
RELEASE DATE:	10/28/2024
SHEET:	5

MODEL: 2 DOOR CASITA

MODEL #: BXB-000009

BOXABL INC.
5345 EAST NORTH BELT ROAD
NORTH LAS VEGAS, NV 89115, USA
+1(702) 500-9000 HELLO@BOXABL.COM

BOXABL

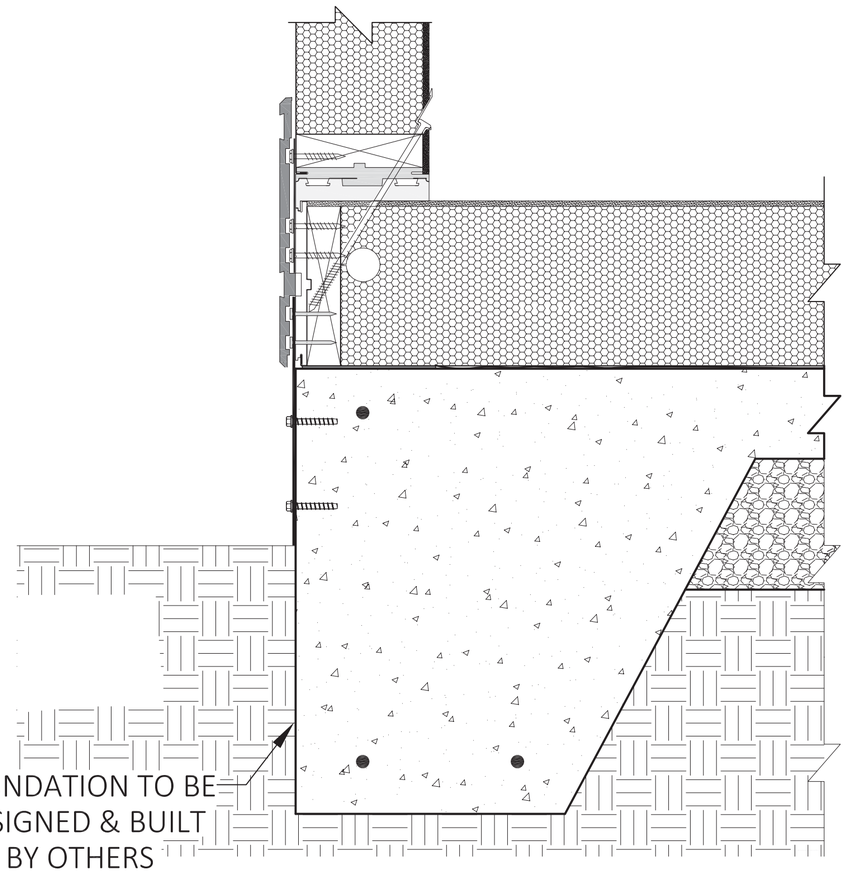

A PERIMETER FLOOR EDGE

SCALE: NONE

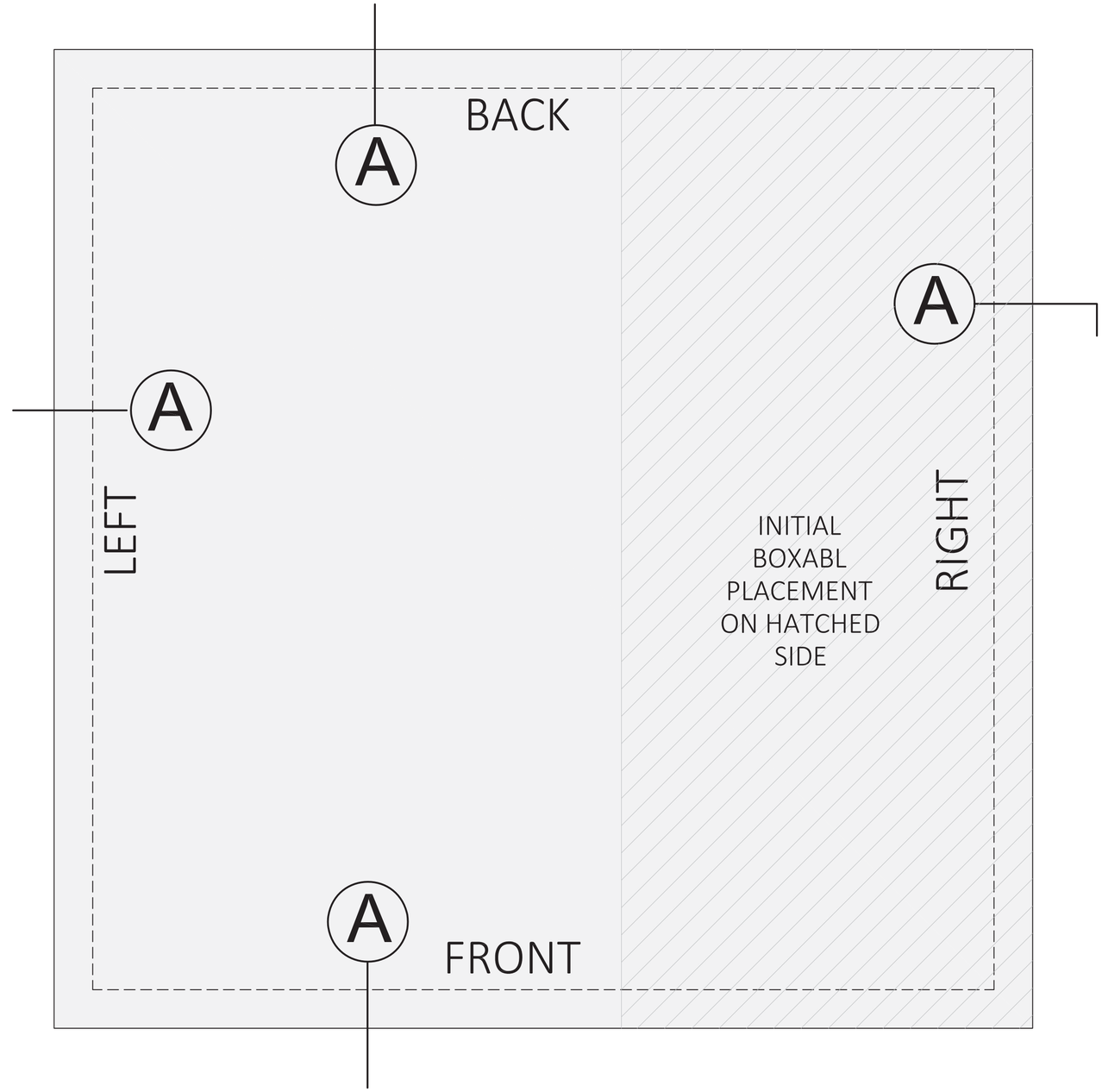

SLAB-ON-GRADE FOUNDATION PLAN

DATE:	REV:	DESCRIPTION:

THICKENED SLAB EDGE FOUNDATION

UNITS:	FT-IN
SHEET FORMAT:	ARCH C
SHEET SCALE:	NONE
CREATED BY:	MN
RELEASE DATE:	10/28/2024
SHEET:	6

MODEL: 2 DOOR CASITA

MODEL #: BXB-000009

BOXABL INC.
5345 EAST NORTH BELT ROAD
NORTH LAS VEGAS, NV 89115, USA
+1(702) 500-9000 HELLO@BOXABL.COM

BOXABL

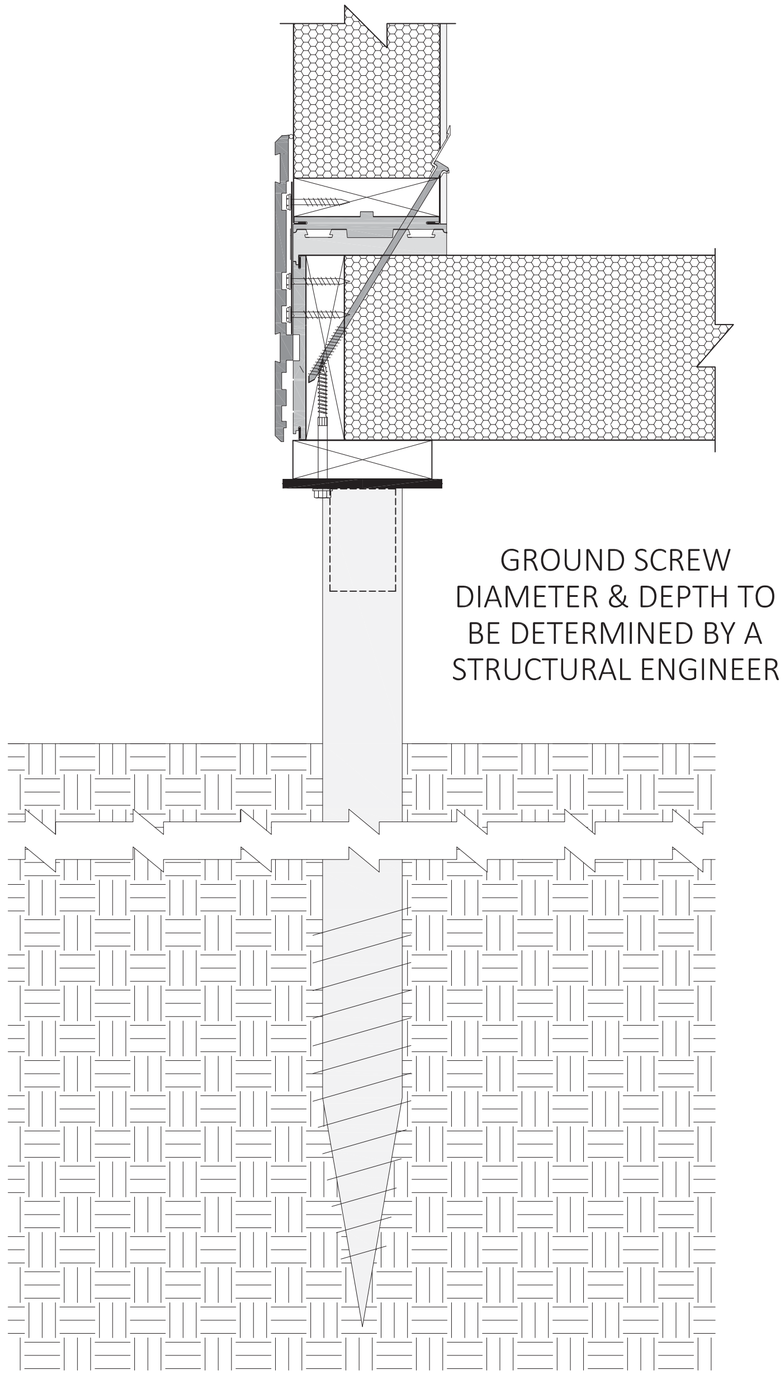

A TYPICAL GROUND SCREW

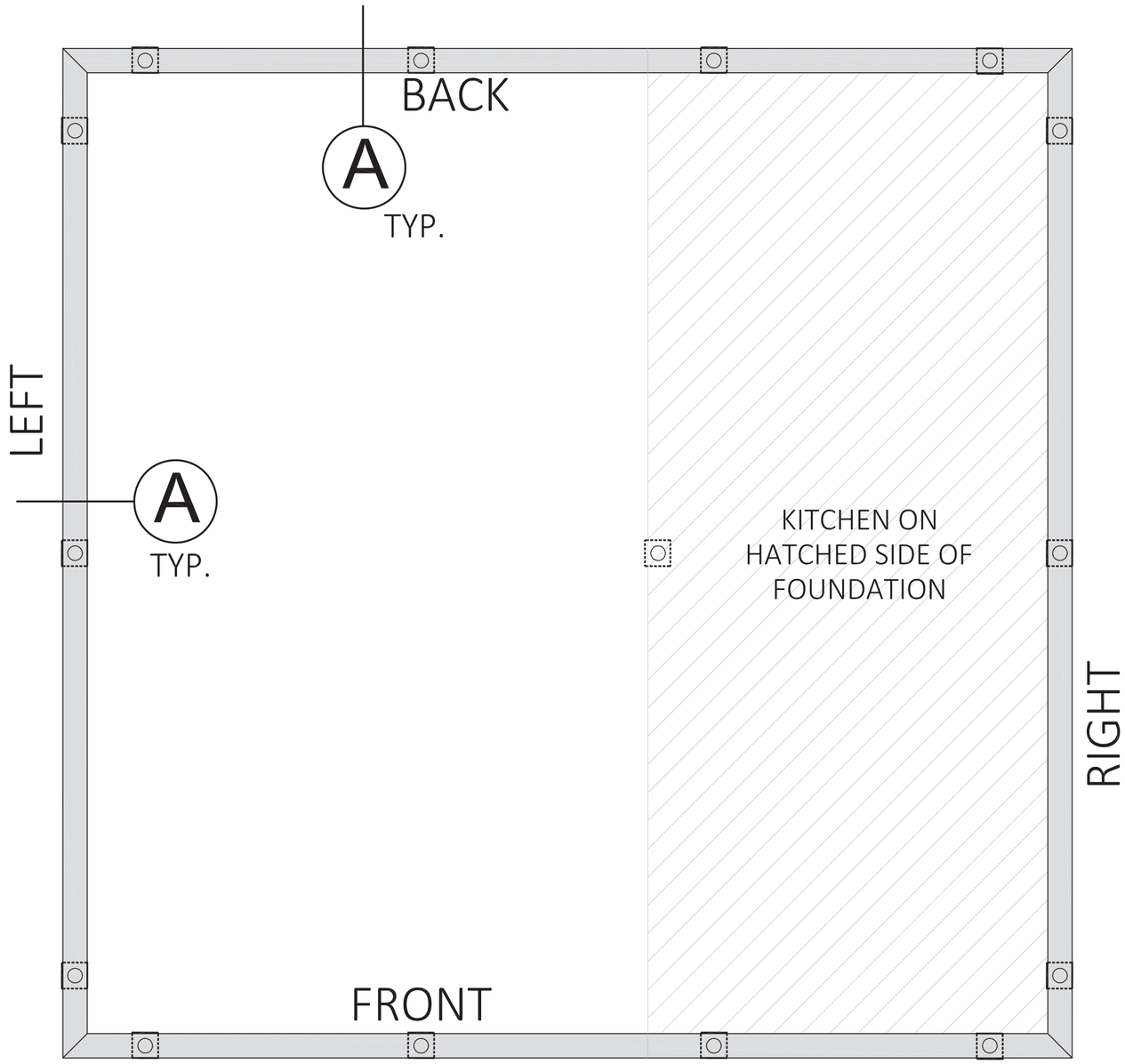

FOUNDATION PLAN

DATE:	REV:	DESCRIPTION:

GROUND SCREW FOUNDATION

UNITS:	FT-IN
SHEET FORMAT:	ARCH C
SHEET SCALE:	NONE
CREATED BY:	MN
RELEASE DATE:	10/28/2024
SHEET:	7

MODEL: 2 DOOR CASITA

MODEL #: BXB-000009

BOXABL INC.
5345 EAST NORTH BELT ROAD
NORTH LAS VEGAS, NV 89115, USA
+1(702) 500-9000 HELLO@BOXABL.COM

BOXABL

GRADE BEAM OPTION

FOR EXPANSIVE SOIL CONDITIONS

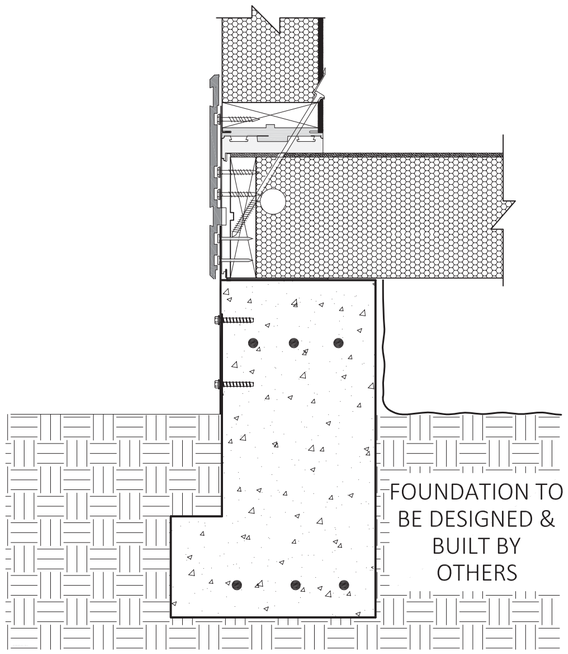

A PERIMETER FLOOR EDGE

SCALE: NONE

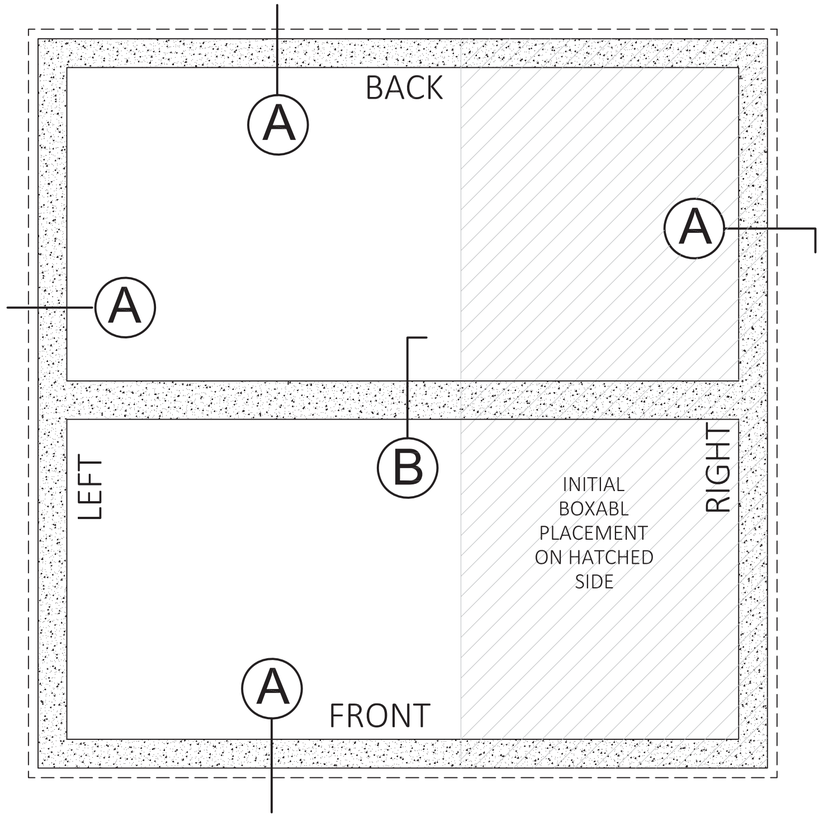

FOUNDATION PLAN

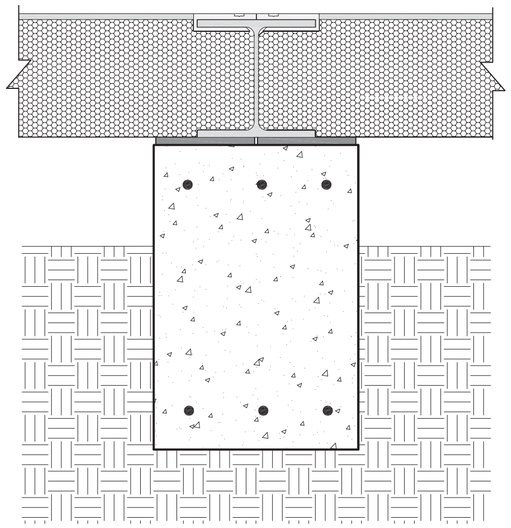

B INTERIOR BEAM SUPPORT

SCALE: NONE

EXPANSIVE SOIL NOTES:

MANY FOUNDATION OPTIONS ARE AVAILABLE TO DEAL WITH EXPANSIVE SOILS. THE MOST EFFECTIVE BEING THE MOST COSTLY, AND VICE-VERSA. THEREFORE, THE OWNER SHOULD BE INVOLVED IN THE DECISION IN WITH THE CONTRACTOR. RECOMMENDATIONS BY A LOCAL GEOTECHNICAL ENGINEER IS RECOMMENDED, PARTICULARY IN SEVERE CASES, AND IF STRUCTURE TILTING IS UNACCEPTABLE.

THE GENERIC DETAILS SHOWN ON THIS SHEET REPRESENT A LOWER COST OPTION. GRADE BEAM DIMENSIONS AND REINFORCEMENT NEED TO BE DESIGNED BY A LICENSED PROFESSIONAL STRUCTURAL ENGINEER.
THIS OPTION DOES NOT PREVENT THE BOXABL CASITA FROM TILTING CAUSED BY DIFFERENTIAL SOIL EXPANSION - THEREFORE IT'S IMPORTANT THAT PLUMBING LINES CAN ACCOMODATE MOVEMENT, AND PLUMBING CONNECTIONS ARE FLEXIBLE TO ACCOMODATE MOVEMENT. SEE PLUMBING DRAWINGS (BY OTHERS) FOR DESIGN MEASURES TO ACCOMODATE EXPANSIVE SOIL.

IF TILTING IS NOT ACCEPTABLE, THE GRADE BEAMS WILL NEED TO BE ANCHORED TO 6 TO 8 VERTICAL MOVEMENT-RESISTNG CONCRETE OR HELICAL PIERS WITH THE GRADE BEAMS POURED OVER A COMPRESSIBLE MATERIAL THAT ACCOMODATES SOIL EXPANSION WITHOUT LOADING THE GRADE BEAMS. THE SPECIFICS OF THESE MEASURES , OR ALTERNATE SYTEMS, SHOULD BE PROVIDED BY A GEOTECHNICL ENGINEER AND DESIGNED BY A LICENSED STRUCTURAL ENGINEER.

THE FOUNDATION CONCEPT SHOWN IS NOT SUITABLE FOR SOIL SUBJECT TO LIQUIFACTION.

DATE:	REV:	DESCRIPTION:

EXPANSIVE SOIL FOUNDATION CONCEPT

UNITS:	FT-IN
SHEET FORMAT:	ARCH C
SHEET SCALE:	NONE
CREATED BY:	MN
RELEASE DATE:	1/31/2024
SHEET:	8

MODEL: 2 DOOR CASITA

MODEL #: BXB-000009

BOXABL INC.
5345 EAST NORTH BELT ROAD
NORTH LAS VEGAS, NV 89115, USA
+1(702) 500-9000 HELLO@BOXABL.COM

BOXABL

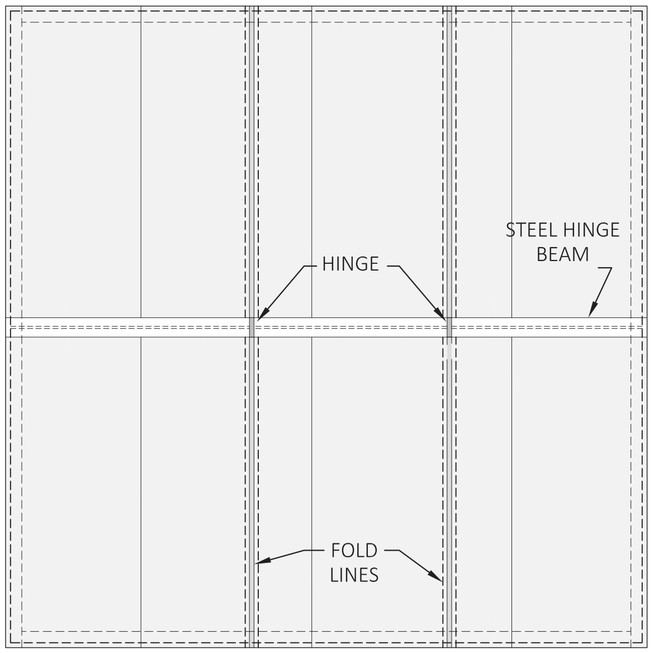

ROOF PANEL LAYOUT

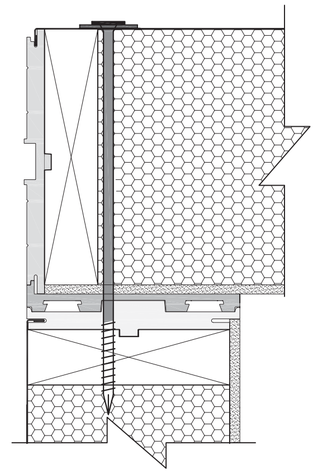

ROOF / WALL CONN.

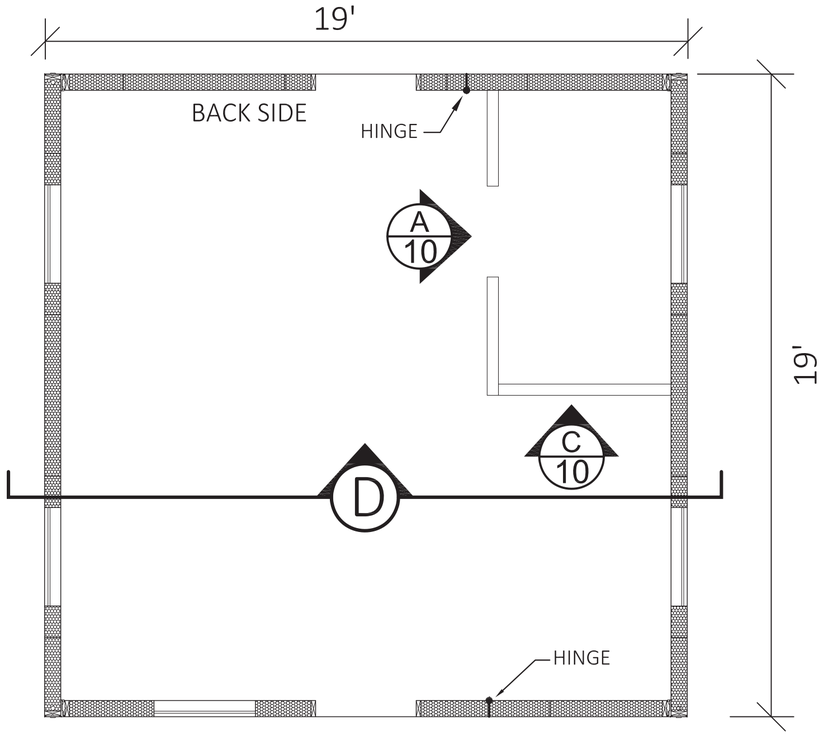

WALL PLAN

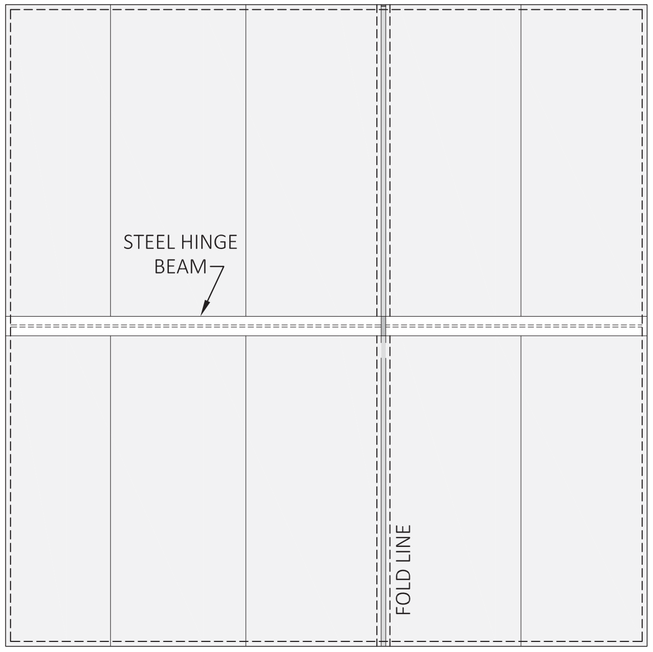

FLOOR PANEL LAYOUT

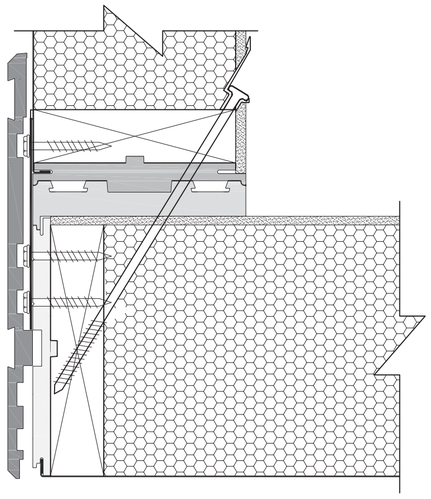

FLOOR / WALL CONN.

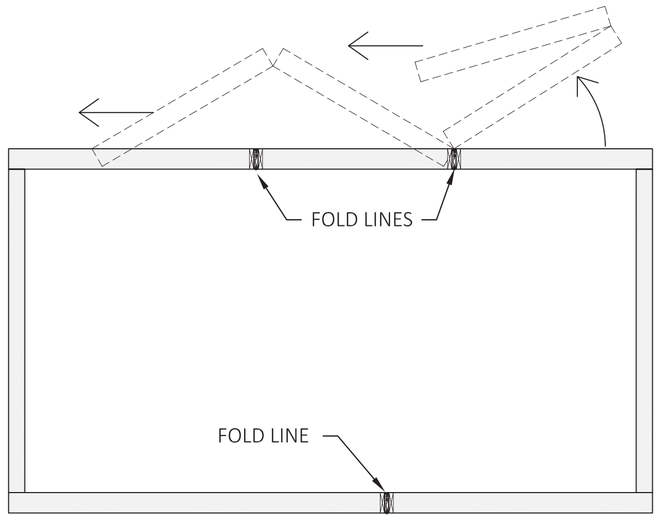

D SECTION

DATE:	REV:	DESCRIPTION:
	○	

SIP ROOF, WALL & FLOOR DETAILS

UNITS:	FT-IN
SHEET FORMAT:	ARCH C
SHEET SCALE:	NONE
CREATED BY:	
RELEASE DATE:	10/28/2024
SHEET:	9

MODEL: 2 DOOR CASITA

MODEL #: BXB-000009

BOXABL INC.
5345 EAST NORTH BELT ROAD
NORTH LAS VEGAS, NV 89115, USA
+1(702) 500-9000 HELLO@BOXABL.COM

BOXABL

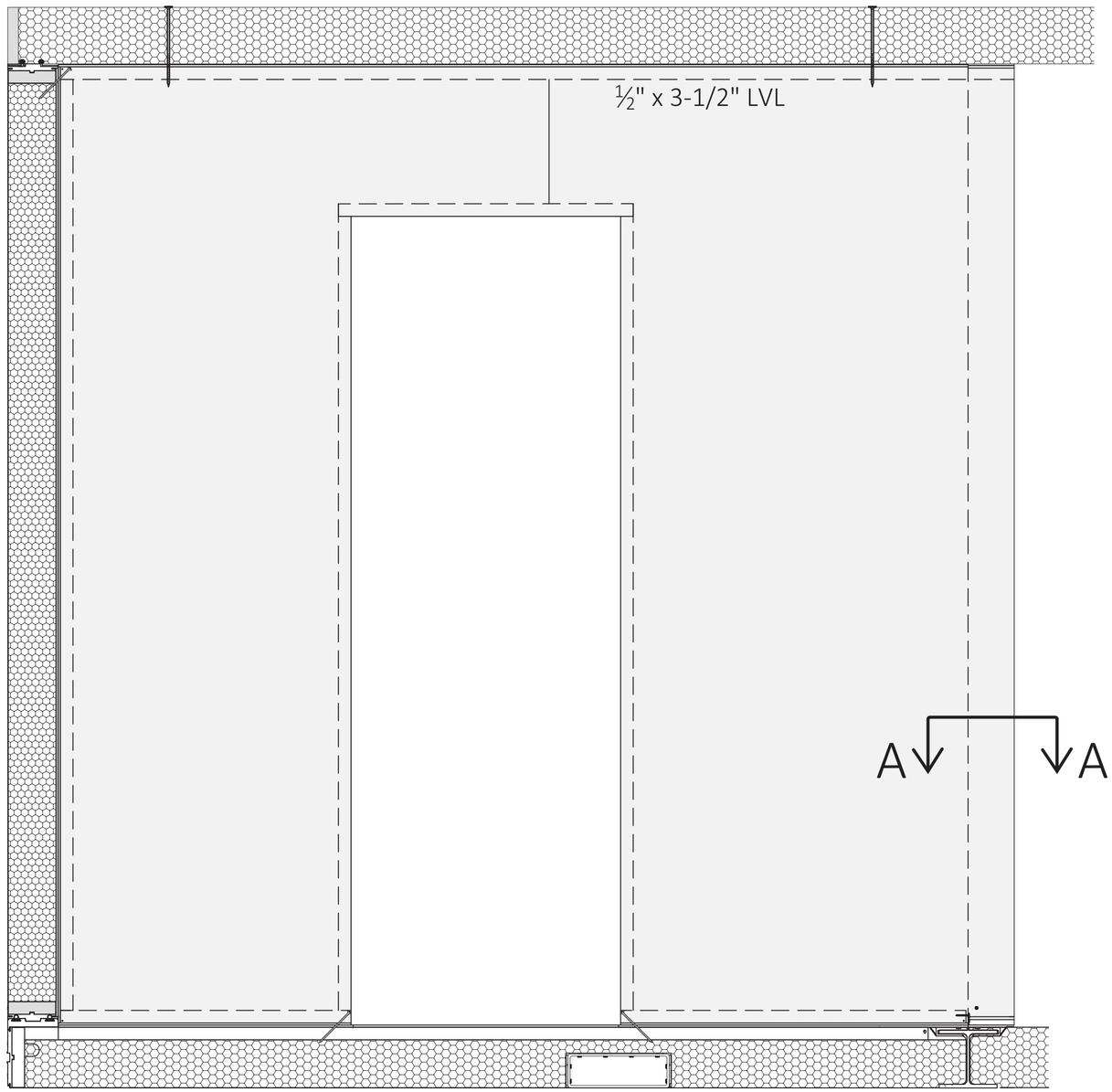

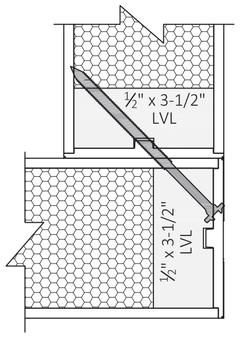

A-A

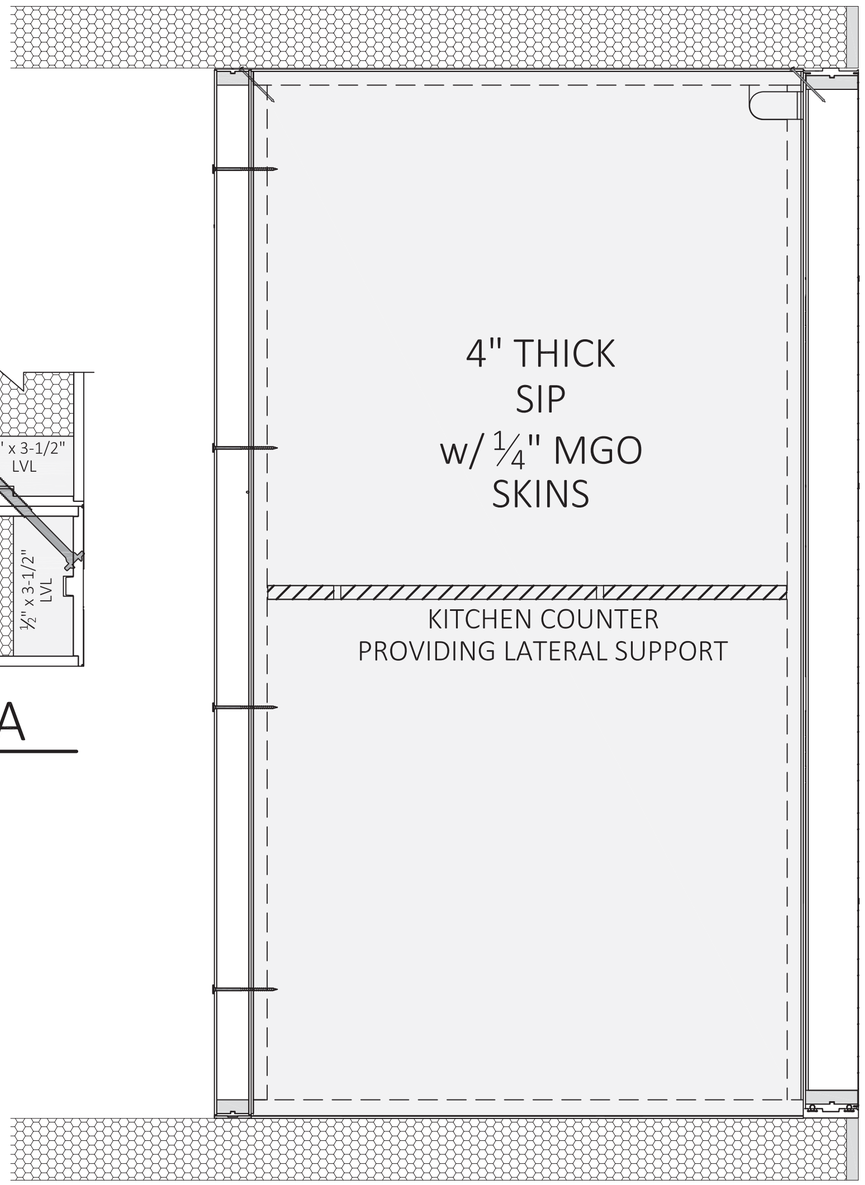

B PARTITION WALL

SCALE: NONE

C PARTITION WALL

SCALE: NONE

DATE:	REV:	DESCRIPTION:

INTERIOR PARTION WALLS

UNITS:	FT-IN
SHEET FORMAT:	ARCH C
SHEET SCALE:	NONE
CREATED BY:	
RELEASE DATE:	10/28/2024
SHEET:	10

MODEL: 2 DOOR CASITA

MODEL #: BXB-000009

BOXABL INC.
5345 EAST NORTH BELT ROAD
NORTH LAS VEGAS, NV 89115, USA
+1(702) 500-9000 HELLO@BOXABL.COM

BOXABL

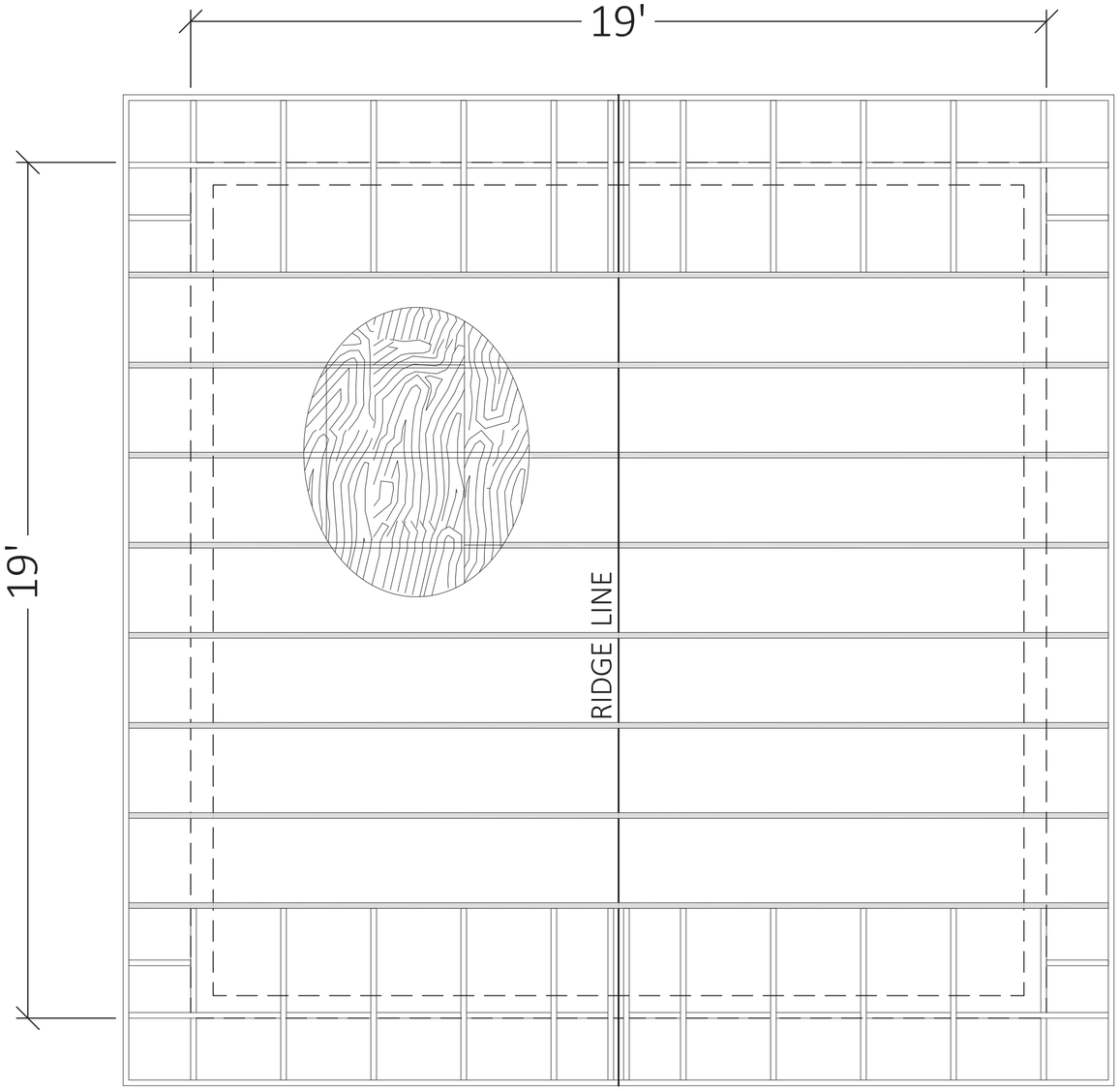

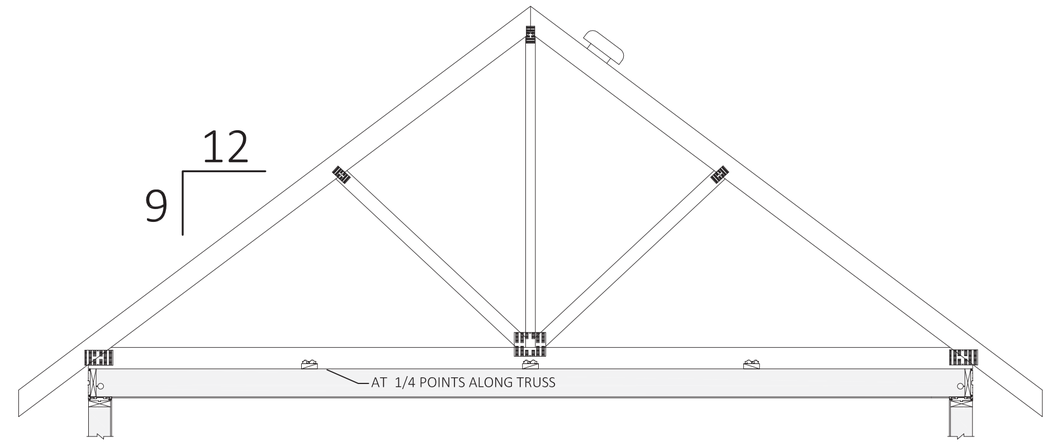

TRUSSES MAY BE
ROTATED 90 DEG.

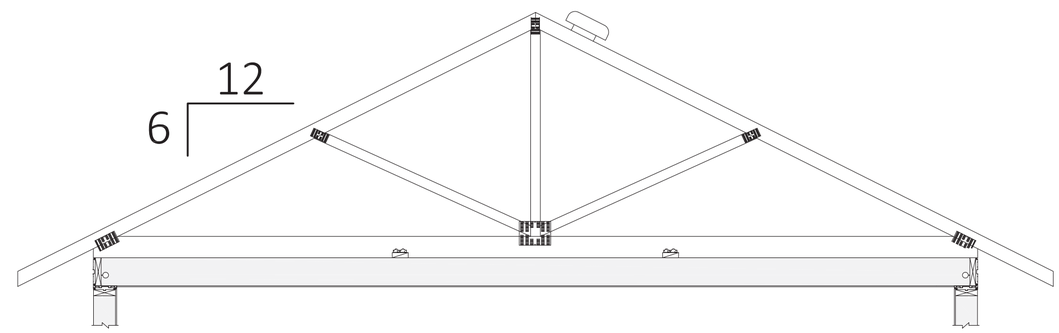

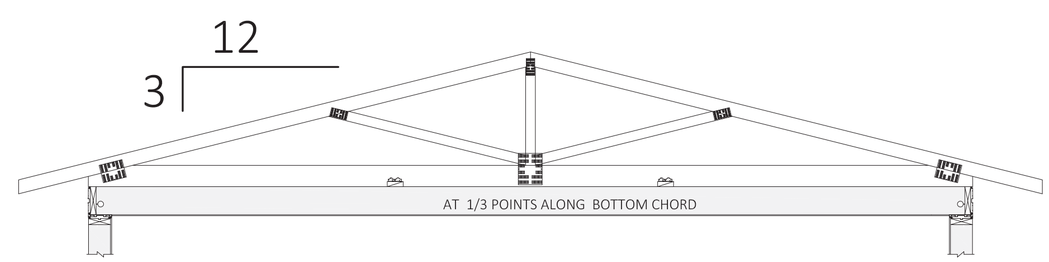

DATE:	REV:	DESCRIPTION:

HIGH SLOPE GABLE ROOF OPTION

UNITS:	FT-IN
SHEET FORMAT:	ARCH C
SHEET SCALE:	NONE
CREATED BY:	
RELEASE DATE:	10/28/2024
SHEET:	11

MODEL: 2 DOOR CASITA

MODEL #: BXB-000009

BOXABL INC.
5345 EAST NORTH BELT ROAD
NORTH LAS VEGAS, NV 89115, USA
+1(702) 500-9000 HELLO@BOXABL.COM

BOXABL

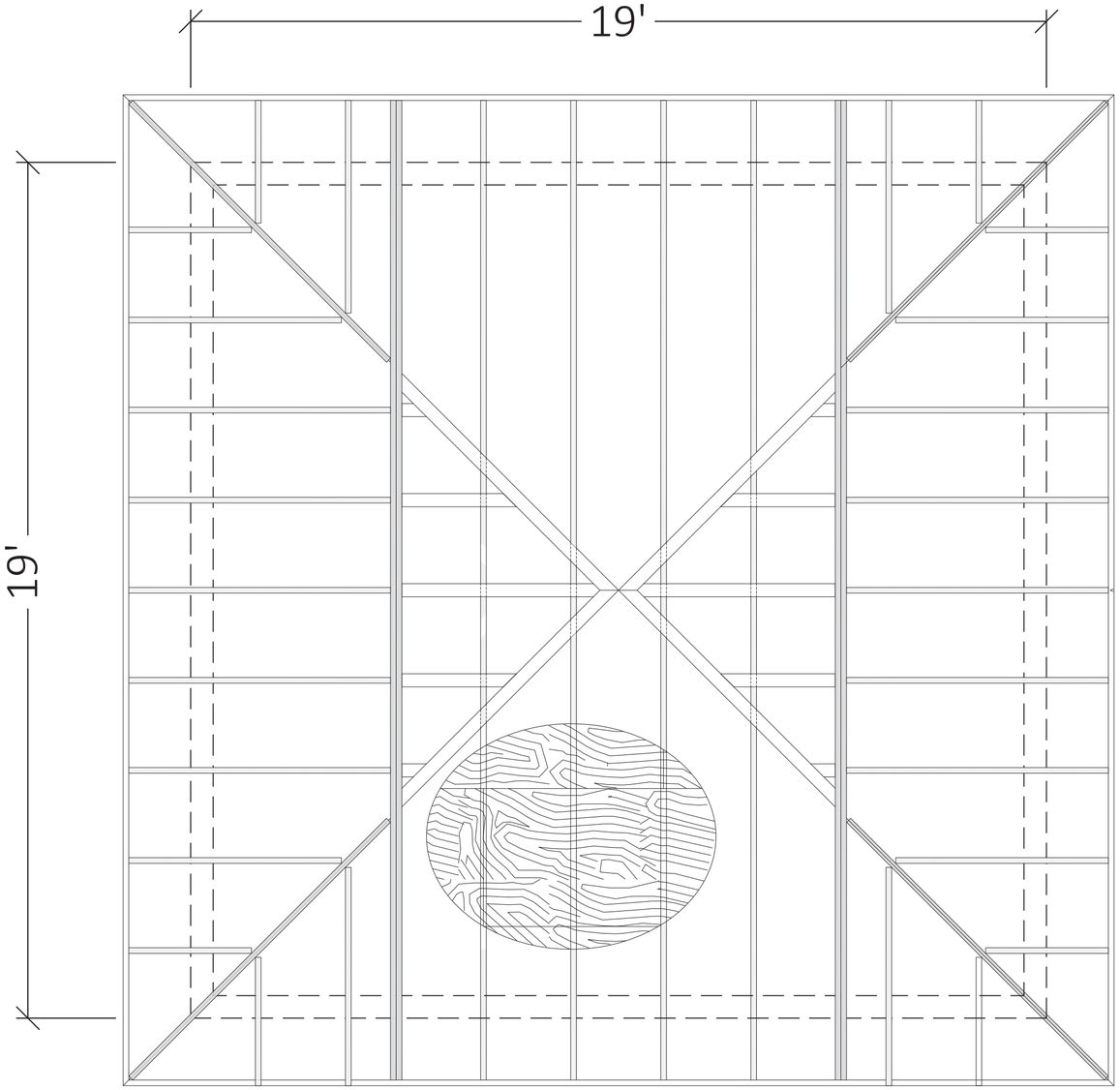

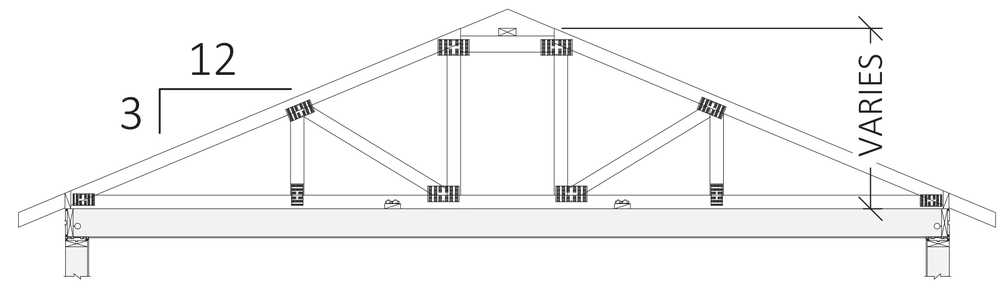

TRUSSES MAY BE
ROTATED 90 DEG.

DATE:	REV:	DESCRIPTION:

HIGH SLOPE HIP ROOF OPTION

UNITS:	FT-IN
SHEET FORMAT:	ARCH C
SHEET SCALE:	NONE
CREATED BY:	
RELEASE DATE:	10/28/2024
SHEET:	12

MODEL: 2 DOOR CASITA

MODEL #: BXB-000009

BOXABL INC.
5345 EAST NORTH BELT ROAD
NORTH LAS VEGAS, NV 89115, USA
+1(702) 500-9000 HELLO@BOXABL.COM

BOXABL

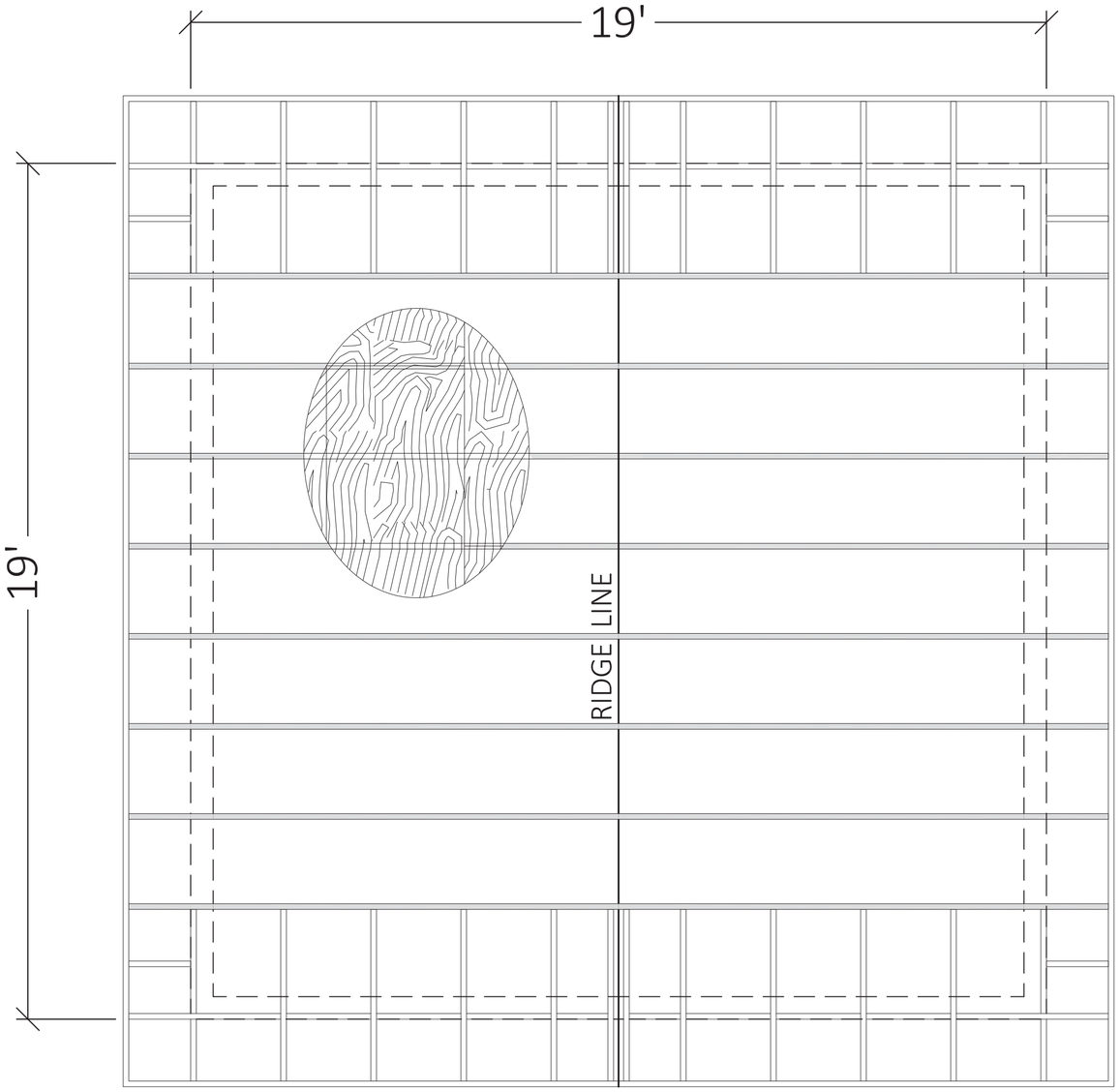

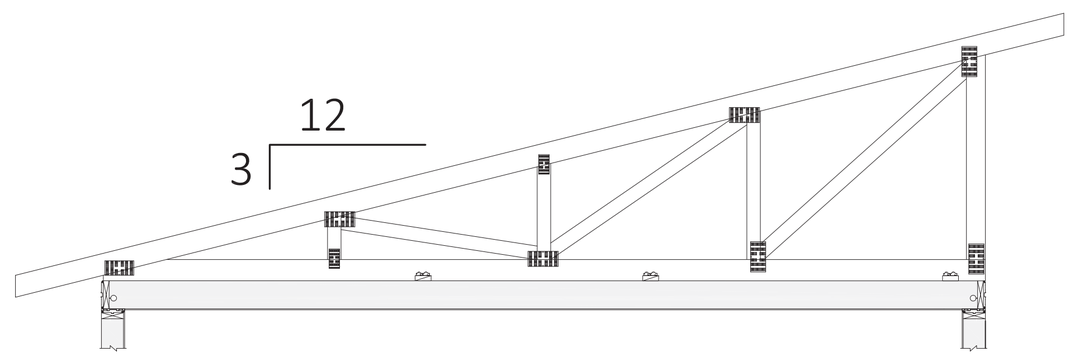

TRUSSES MAY BE ROTATED 90 DEG.

DATE:	REV:	DESCRIPTION:

HIGH SLOPE
SHED ROOF OPTION

UNITS:	FT-IN
SHEET FORMAT:	ARCH C
SHEET SCALE:	NONE
CREATED BY:	
RELEASE DATE:	10/28/2024
SHEET:	13

MODEL: 2 DOOR CASITA

MODEL #: BXB-000009

BOXABL INC.
5345 EAST NORTH BELT ROAD
NORTH LAS VEGAS, NV 89115, USA
+1(702) 500-9000 HELLO@BOXABL.COM

BOXABL

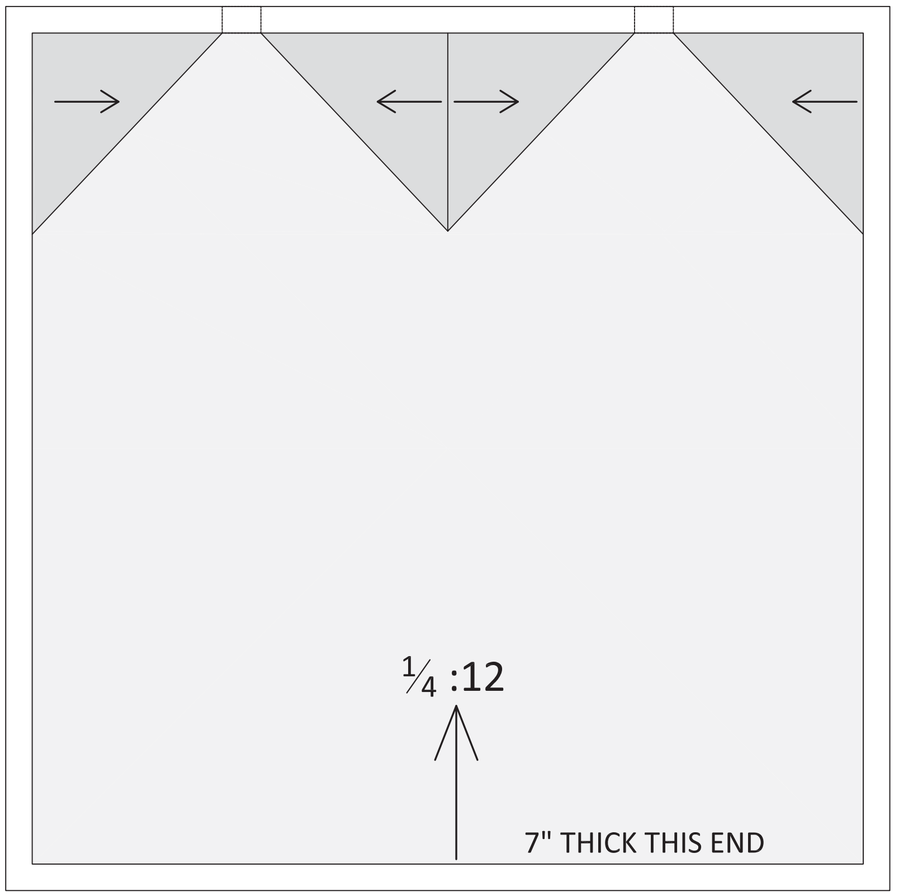

ROOF PLAN

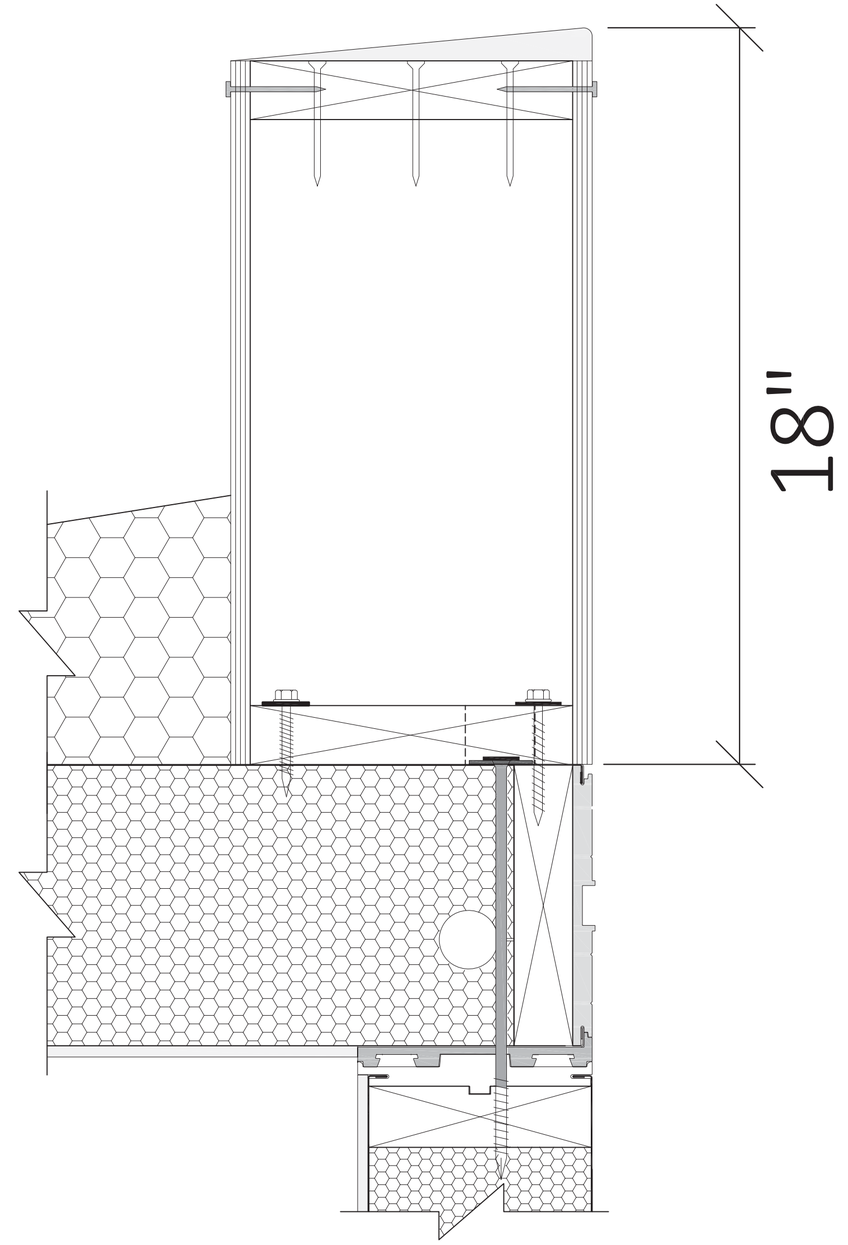

ROOF EDGE

DATE:	REV:	DESCRIPTION:

PARAPET ROOF OPTION

UNITS:	FT-IN
SHEET FORMAT:	ARCH C
SHEET SCALE:	NONE
CREATED BY:	
RELEASE DATE:	10/28/2024
SHEET:	14

MODEL: 2 DOOR CASITA

MODEL #: BXB-000009

BOXABL INC.
5345 EAST NORTH BELT ROAD
NORTH LAS VEGAS, NV 89115, USA
+1(702) 500-9000 HELLO@BOXABL.COM

BOXABL

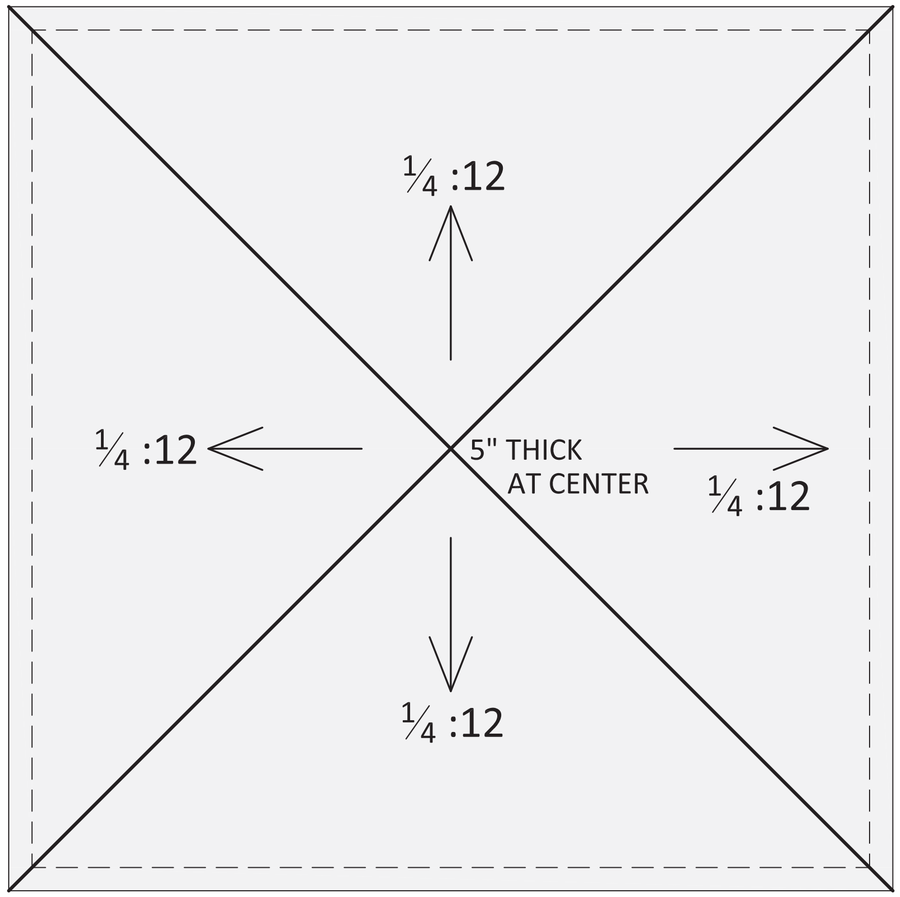

ROOF PLAN

MAXIMUM TAPERED ROOFING WEIGHT:
2 psf + 0.7 psf x (MAX. ALLOW. GROUND SNOW LOAD - ACTUAL GROUND SNOW LOAD)

EPDM ROOFING
OVER
TAPERED INSULATION
GLUED TO ROOF.
PER DESIGN BY OTHERS

DATE:	REV:	DESCRIPTION:

LOW SLOPE ROOF OPTION

UNITS:	FT-IN
SHEET FORMAT:	ARCH C
SHEET SCALE:	NONE
CREATED BY:	
RELEASE DATE:	10/28/2024
SHEET:	15

MODEL: 2 DOOR CASITA

MODEL #: BXB-000009

BOXABL INC.
5345 EAST NORTH BELT ROAD
NORTH LAS VEGAS, NV 89115, USA
+1(702) 500-9000 HELLO@BOXABL.COM

BOXABL